

HARDWARE GUIDES

EuroProt+ Hardware description

PROTECTA HUNGARY

DOCUMENT ID: PP-13-19958
VERSION: 2.33
2026-11-23, BUDAPEST

PROTECTION, AUTOMATION AND CONTROL FOR POWER INDUSTRY

VERSION INFORMATION

VERSION	DATE	MODIFICATION	COMPILED BY
Preliminary	2010-02-01	Preliminary version	Budenszki
Preliminary	2010-04-23	Corrected preliminary version	Budenszki
1.0	2010-11-11	First edition	Petri
1.1	2011-06-25	Module description updated, some technical data added	Budenszki
1.2	2011-09-07	Binary output module (R4) drawings corrected, new modules added	Budenszki
1.3 prelim.	2011-09-08	PS+2401 power supply added, some other corrections added	Budenszki
1.31	2012-04-17	New modules added	Budenszki
1.32	2012-04-26	Wall-mounting drawing update	Budenszki
1.34	2012-08-28	Minor corrections	Budenszki
1.35	2012-09-10 2012-10-09 2012-10-10 2012-10-15 2012-10-31 2012-11-07 2012-11-21	24HP IP54 feature added, power supply naming clarification, PS+4401, PS+2101 and PS+1602 added, O16+2401 and O16+4801 added 24 V DC PSTP+4201 and PS+4201 added Resolving Acronyms EMC/ESD conformance data updated RIO module added Device housing description updated O8+2401 module added VT+ and TRIP+ modules data updated HMI+ module types added Device weight data added ASIF-O transmitter and receiver data added TRIP+ wiring methods	Budenszki, Nagy
1.36	2013-06	CPU+9201 module type added COM+8882, COM+1112 module types added Long and short haul Ethernet transceiver types added ASIF-O POF, ASIF-O GLASS transmitter output optical power data updated, ASIF-O GLASS receiver data added Slot numbers updated in backplane table CT+ accuracy and power consumption data updated, recommended applications added VT+ selectable voltage range and power consumption data updated, recommended applications added Binary input modules data updated R4S+ modules data updated TRIP+ module wiring chapter updated RTD module data updated AI modules data updated PS+2101 input voltage interruption time updated O6R5 modules added Semi-flush mounting chapter updated **Product availability** chapter added Minor corrections	Budenszki, Nagy
1.37	2014-10	**New modules added:** CPU+0007, CPU+0291, CPU+1191, CPU+1391, CPU+1291, CPU+9291,	Budenszki, Nagy

		COM+9901, COM+9902, COM+9992, COM+1324, HMI+2404, HMI+2504, CT+5152, CT+5153, CT+2500, VT+2212, R8+01, R8+A1, R8+C0, R8+FF, R12+4400, R16+0101, R16+0001, R16+A001, RTD+0200, AIC+0201 **CPU and COM module:** CPU+ module description updated. **Human-Machine Interface (HMI) module:** Remote HMI product added. **Voltage input module:** Voltage measuring ranges updated. **Binary input module:** Thermal withstand voltages updated. **Signaling module:** Rated voltages updated. Main features updated. **Tripping module:** Thermal withstand voltages updated. TRIP+ module wiring description and figures updated. **RTD input module:** RTD module wiring figures updated. **Analog input module:** AIC+ module illustrations has been updated. AI wiring figures added. **Power supply module:** Input voltage interruption times updated. Input voltage ranges updated. Internal fuses added. Inrush current values added to main features. **PSTP+ module:** Input voltage interruption times updated, Input voltage ranges updated. Internal fuses added. Inrush current values added to main features **O6R5+ module:** Rated voltages updated, Relay output main features updated **Binary input module with time synchronization:** Module description updated, Withstand voltage for sync. input added **General data chapter:** Altitude, atmospheric pressure added **Mounting methods chapter:** Rack types vs. mounting methods table added, Illustrations updated for all methods, 42 HP and 84 HP remote HMI dimensions added **Product availability chapter:** Modules added	
1.38	2015-02	**Minor corrections**: SL/BL and SLA/BLA marking correction **HMI module:** LCD dot-defect handling policy chapter added **Current input module:** CT+2500 became obsolete, replacement: CT+1500 **Tripping module:** TRIP+2101 restricted to 110 V DC application,	Budenszki, Nagy

		TRIP+2201 became available and recommended for new designs with rated voltage 220 V DC **PSTP+ module:** Card drawings updated, PE symbol added **Minor corrections**	
1.39	2015-08	**New modules added:** CPU+0281, CPU+0501, CPU+1401, CPU+1091 PSTP+2102, PSTP+4202 VS+0031 **Mechanical data:** Notes on solid and perforated rack covers for 84 and 42 HP devices added. **Mounting methods:** Semi-flush mounting of 24 HP panel instrument case figure updated. Wall mounting method figures updated. IP54 rated mounting kit for 42 HP devices chapter updated. No mounting chapter added. **Minor corrections**	Budenszki, Nagy
1.40	2018-10	**New modules added:** ATO+0002, ATO+0004, CPU+A001, CPU+A011, COM+1801, CT+5111, CT+5154, CT+5155, CT+5253, R1T+0001, RTD+1200, CVS+0001, CVSR+0001, INJ+0005, INJ+0015, RAI+01, RAI+11, RINJ+21, PS3F+1001, PS+2303, PSR2+2101, RBOX+A201. **Current input module:** Thermal withstand data updated. Accuracy data removed. Max. measured current data updated. **Voltage input module:** Accuracy data removed. Max. measured current data updated. **Signaling module:** Main features updated. Unused modules have been removed. **Tripping module:** TRIP+1101 restricted to 110 V DC. **RTD input module:** RTD module wiring figures updated. **Power supply module:** PS+4401 nominal 60 V DC input voltage range added. **PSTP+ module:** PSTP+4201 nominal voltage and input voltage range updated. **Special devices:** TRCS has been added. **Mounting methods:** IP54 rated mounting kit for 84 HP devices **Minor corrections**	Budenszki, Bidó

1.41	2020-06-18	**New modules added:** HMI+/3505, HMI+/3506, HMI+/5706, HMIT+/3505, HMIT+/3506, HMIT+/5706, HMI+/2406, HMI+/2506 CPU+/0201T, CPU+/1201T, CPU+/1291T, CPU+/6001 COM+/1103, COM+/1111D, COM+/1202 CT+/1111, CT+/1515, CT+/5115, CT+/5116 VT+/2212 AIC+/0202 O9S+/4221F *Shorter default rack for 42HP devices* **New chapter about terminals/connectors:** New connectors added under Chapter 20, module chapters updated with the available terminals wherever necessary (CPU, COM excluded!) **CPU and COM module:** EOB removed (obsolete) MM/LC connector indicated COM module introduction shortened Added recommendations for the cabling of the multimode connectors **HMI module:** HMI modules for reduced racks, remote HMI modules added to the table S24 HMI modules' table separated and extended with the DIN-rail mounted devices **Current input module:** CT Application Guide removed, as it became obsolete **Binary input module:** Notes added for thermal withstand voltage and for clamp voltages **Signaling module:** Notes and continuous carry data for modules with solid-state relays (SSR) updated **Tripping module:** Thermal withstand voltage updated. Tech data table of the TCS updated **Analog input module:** AI wiring figures for obsolete modules removed, the rest is updated **Generator protection module:** External boxes renamed, figures updated External boxes for middle-grounded rotors unified into one box Introduction added to the boxes **Power supply module:** PS+/1030 and PS+/1060 input voltage ranges and interruption times updated. Both modules are reintroduced for special configurations. **Mixed function modules:** PSTP+/4202 and PSTP+/2102 are shown separately in the table Tech. data of the TCS added **Special devices:** RIO figures have been added and updated TRCS figures have been added **Mechanical data:**	Bidó, Erdős

		New sub-chapters (general mech. data, connectors/terminals) Existing terminal types listed here, introduction of new terminal types and naming (F, T, R) **Mounting methods:** *Shorter 42HP rack* added Console mounting replaced with Fold-down mounting. Figures have been added. **Other corrections** Nominal (rated) values now get the 'N' index. Minor corrections VT+/2245, INJ+/0005, O9S modules are no longer special modules	
1.42	2021-06-02	**New chapters:** Sampling synchronization module Previous 42HP and 84HP device housings **Chapter deleted:** Special devices (RIO, TRCS), these are moved into their own separate descriptions RBOX chapter **New modules added:** CPU+/0211, CPU+/6004, CPU+/6094, CPU+/6601, COM+/6603, COM+/6663, PS+/1303, TSYNC+/0071 **T connector option added:** CPU+/0211, CPU+/0291, CPU+/1101, CPU+/6601, CPU+/A001, PS+/1060, PS+/2601, RAI+/11, RINJ+/21, O9S+/2111, O9S+/2121, TRIP+/21F1 **CPU and COM module:** Modules with T connector option removed from the list, highlighted differently, notes added. COM chapter split up according to the application fields **Backplane module:** Chapter modified for device housing information only. Backplane module information is moved to Chapter 1 Device pictures updated **HMI module:** Introduction part updated Split into three subchapters (local HMI, remote HMI, S24 HMI) Tables revised, all modules referring to normal-depth housings marked as obsolete HMI pictures updated 84HP devices now get the rack with reduced depth All device housings with normal depth size are obsolete **Voltage input module:** Continuous voltage withstand value lowered to 200V for VT+/2211, VT+/2212 and VT+/2215	Erdős

		Current input module: Notes added to the CT+/5115 module, ring-lug option added CT+/5253 nominal values fixed **General Data:** Subchapter added for hardware type tests' list **Mounting methods:** Flush mounting data/figure updated for 84HP and double 42HP devices Rack mounting data/figure updated for 84HP devices Rack mounting figure added for double 42HP devices Semi-flush mounting data/figures updated for 84HP and 42HP devices Semi-flush mounting data/figures updated for S24 devices Wall mounting data/figure updated for 84HP and 42HP devices Wall mounting figures added for 84HP and 42HP devices with one terminal line only Fold-down mounting data/figure updated for 84HP devices Fold-down mounting with terminals data/figure updated for 84HP devices Fold-down mounting with terminals data/figure added for 42P devices	
1.43	2021-09-22	**New modules added:** CPU+/1004, CPU+/6093, CPU+/A004, CPU+/A094, COM+/1901 **T connector option added:** CPU+/0501, COM+/1801, COM+/1901 **CPU and COM module:** COM+/1801 application information updated **Current input module:** CT+/0101 rated current, max. measured current updated CT+/5153 T option added (only the handle changes) **Mechanical data:** Optional IP54 front panel listed here as well **Mounting methods:** IP54 front panel option added for S24 devices, notes added to the mounting methods	Erdős
1.44	2022-03-31	**New modules added:** O15+/1101T, O15+/4801T **T connector option added:** PS+/4401, O9S+/4221, CPU+/0281 **Minor corrections**	Erdős

2.00	2023-02-10	**New modules added:** CPU+/1202, CPU+/1292, CPU+/9901 HMI+/2304, HMI+/2306, HMI+/2604, HMI+/2606, HMI+/2704, HMI+/2706, HMI+/3404, HMI+/3405, HMI+/3406, HMI+/5004, HMI+/5704 PS+/4261, PS+/4264, PS+/2161, PS+/2164 **CPU and COM module:** Connector types info updated, table rearranged **VT module:** Short time overload data updated (DC removed, 2211 and 2246 raised to 10s) **Signaling module:** Drawings updated **Power Supply module:** Voltage dip withstand data updated according to IEC 60255-26 **Analog input module:** Voltage input removed **Connectors** Top-screw BLAT removed	Erdős
2.01	2024-05-08	**New module added:** CPU+/A002	Erdős
2.1	2024-09-17	**New modules added:** CPU+/6201, CPU+/6501T, CPU+/6691, CPU+/1302, CPU+/1502, CPU+/2202, CPU+/2292, CPU+/22F2S, CPU+/6092S, CPU+/9202, CPU+/A092, CPU+/A202, CPU+/A212, CPU+/A292, CPU+/F202, CPU+/F292, CPU+/F2F2S, O12+/2102, O15+/2201T, O15+/2401T, R6+/0012, R8+/01, R8+/0002, R12+/0002, R12+/4400, TRIP+/2102, INJ+/ 0025, PS+/2162, PSTP+/2104T, PSTO+/2101 **VT module:** VT+/2211 module - Power consumption of voltage input values doubled **All module types:** Connector types info updated **PSTO+ chapter:** Added a new chapter 18.3 PSTO+ module **Connectors - F terminal types:** Obsolete terminal type, not recommended for new designs, removed **Minor corrections:** Minor corrections in the text and on drawings	Ádám
2.11	2024-10-11	**Minor corrections** **Rated voltage values:** corrected for the new signaling modules	Ádám

2.12	2024-11-06	**New module added:** VT+/2221 **Binary input module:** 125V DC rated voltage added wherever applicable **Tripping module:** 125V DC rated voltage added wherever applicable **Power supply module:** 125V DC rated voltage added wherever applicable **PSTP+ module:** 125V DC rated voltage added wherever applicable	Erdős
2.2	2025-04-16	**New modules added:** CPU+/6294, CPU+/0292, CPU+/1102, CPU+/1182, CPU+/15F2S, CPU+/22E2S, CPU+/2502, CPU+/6002, CPU+/6092, CPU+/6202S, CPU+/6302S, CPU+/6502S, CPU+/A0G2S, CPU+/A012, CPU+/A062, CPU+/A0F2, CPU+/A292S, CPU+/A2F2, CPU+/F0D2, CPU+/F2E2S HMI+/BRM01, HMI+/BRM03, HMI+/EPP01, HMI+/EPP02, HMI+/EPP03, HMI+/EPP07, HMI+/EPP08, HMI+/EPP09, HMI+/EPP10 VT+/2231T, O8+/2102, O8+/4202, O12+/4202, O15+/2102, O15+/4202, R15+/0002, R6S+/0012, TRIP+/4202, INJ+/0080T, INJTR+/0020, INJTR+/0080, TSYNC+/0071T, O6R5+/4202, O9S+/2112, O9S+/4222 **T connector option added:** CPU+/1501T, CT+/1500T, PS+/1602T, PSTP+/4202T **Secure boot option added** (to basic modules)**:** CPU+/1202S, CPU+/2202S, CPU+/A002S, CPU+/A0F2S, CPU+/A292S, CPU+/A2F2S, **CPU module:** Secure boot option added **CT module:** CT+/5155 module - Max. measured current and Thermal withstand values corrected **TRIP module:** Trip+/21F1 rated and withstand voltage values changed **INJTR module** chapter added **New Connector type:** New connector type **5CDG 7.62** (P) added. **Minor corrections** Minor corrections in the text and on drawings	Ádám

2.21	2025-05-05	**New, P connector option added:** CT+/5151P, CT+/5115P (more to come) Minor corrections for the P connector option.	Erdős
2.3	2026-07-08	**New modules added:** CPU+/0202, CPU+/0212S, CPU+/0402S, CPU+/1002, CPU+/1002S, CPU+/1102S, CPU+/1302S, CPU+/1402S, CPU+/1502S, CPU+/2402S, CPU+/2502, CPU+/6002S, CPU+/A012S, CPU+/A092S, CPU+/A202S CPU+/A282S, CPU+/F0F2S, CPU+/F202S, O8+/1402, R8+/0C02, R12+/0002, R12+/8002, PSTP+/1432, PSTP+/2135, PSTP+/4235, O6R5+/2102 **New, P connector option added:** CT+/0101P, CT+/1500P, CT+/5153 **System design** Sampling data added **HMI module:** From now on the HMI+/5004 module appears as HMI+/EPP04 The double 42HP variant of HMI+/5004 deleted **CPU module:** Notes added for the newer CPU modules (CPU+/xxx2 and CPU+/xxx2S) Drawings changed for CPU-s with the ending E2 and F2 List added for CPU modules supporting RSTP. **CT module:** CT+/5153, power consumption values remeasured and updated **VT module:** VT+/2221T module removed VT+/2231T module generates 8 channels, instead of 4 **Signaling module** Rated Voltage changed to 400 V AC / 250 V DC According to IEC 60255-1, the following data changed in the main features of the Signaling modules and the PSR2+ module: • Breaking capacity • Short time carrying capacity • Mechanical endurance • Circuit closing capability • Bounce time Notes added for Continuous carry data **TRIP module** TRIP+/2102:	Ádám, Erdős

		• Continuous carry raised to 10A for TRIP+/2102 • Short time overload data added for TRIP+/2102 **Mixed function module** PSR2+: Rated Voltage (Signaling relay characteristics) changed to 400 V AC / 250 V DC According to IEC 60255-1, the following data changed in the main features of the Signaling modules and the PSR2+ module: • Breaking capacity • Short time carrying capacity • Mechanical endurance • Circuit closing capability • Bounce time Notes added for Continuous carry data **Modules for current injection** Chapter restructured **General Data:** Maximum humidity value raised from 93% to 95% Standard conformance chapter updated and extended + 70 ºC for 16h Operation temperature note added **Mechanical data:** At the semi-flush mounting of 24 HP panel instrument case the maximal value of x changed from “placed freely” to 75 mm	
2.31	2026-07-31	Minor fixes **New modules added:** CPU+/1192, CPU+/1192S, PS+/2130, PS+/2135	Ádám
2.32	2026-11-04	**New modules added:** CPU+/0502S, CPU+/1212S **CPU and COM module:** SFP chapter updated, IEEE C37.94 SFP added	Ádám
2.33	2026-11-23	**General Data:** Minimum humidity value lowered to 5%	Erdős

CONTENTS

1 System design 15
2 CPU and COM module 16
2.1 CPU+ module 16
2.1.1 Fast start-up 17
2.1.2 HMI and communication tasks 17
2.2 COM modules 28
2.2.1 COM modules for binary signal transmission 29
2.2.2 COM modules for line differential communication 30
2.2.3 COM modules for busbar differential protection communication 31
2.2.4 COM modules for Remote I/O (RIO) servers 32
2.3 Communication interface characteristics 33
2.3.1 Ethernet multi-mode transmitter and receiver 33
2.3.1.1 MM/ST connector 33
2.3.1.2 MM/LC connector 34
2.3.2 Ethernet single mode transmitter and receiver 35
2.3.2.1 Long haul single mode transceiver 35
2.3.2.2 Short haul single mode transceiver 36
2.3.3 Small Form-factor Pluggable connector (SFP) 37
2.3.3.1 Multi mode transceiver - MM/LC 38
2.3.3.2 Long haul, single mode transceiver - SM/LC 40
2.3.3.3 Short haul, single mode transceiver – SM/LC 41
2.3.3.4 RAD E1 (G703, 2 Mbit/s) 42
2.3.3.5 RJ45 Small Form-factor Pluggable connector 43
2.3.4 ASIF-O transmitter and receiver 44
2.3.4.1 ASIF-O POF 44
2.3.4.2 ASIF-O GLASS 44
2.3.5 ASIF-G transmitter and receiver 45
2.3.6 G.703 64 kbit/s co-directional interface (E0) 46
2.3.7 PRP/HSR redundant Ethernet communication interface 47
2.3.7.1 Parallel Redundancy Protocol (PRP) 47
2.3.7.2 High-availability Seamless Redundancy (HSR) 48
3 Device housing 49
4 Human-Machine Interface (HMI) module 51
4.1 Local HMI modules 51
4.2 Remote HMI 54
4.3 S24 HMI 56
4.4 Parts of the HMI modules 57
5 Current input module 59
6 Voltage input module 64
7 Binary input module 67
8 Signaling module 72
9 Tripping module 76

9.1 TRIP+ module wiring 78
9.1.1 3-wire TRIP+ wiring methods 78
9.1.2 2-wire TRIP+ wiring methods 79
9.2 Trip Circuit Supervision (TCS) 80
10 RTD input module 81
10.1 RTD module wiring 82
11 Analog input module (AI) 83
11.1 AI module wiring 84
12 Analog output module (ATO) 85
12.1 ATO module wiring 86
13 Sensor input module 87
14 Modules for current injection 89
14.1 Complex injector modules 89
14.2 Injection controller 91
14.3 Injector transformers 92
15 Generator protection modules 93
15.1 Auxiliary boxes for rotor earth fault protection 94
15.1.1 Use of auxiliary boxes 94
15.2 Wiring of the rotor earth fault protection modules 95
16 Power supply module 96
17 Sampling synchronization module 101
18 Mixed function modules 102
18.1 PSTP+ module 102
18.1.1 Trip Circuit Supervision (TCS) in PSTP modules 105
18.2 PSR2+ module 106
18.3 PSTO+ module 108
18.4 O6R5+ module 110
18.5 Binary input module with time synchronization 113
18.6 Externally driven trip module 115
19 General data 116
19.1 Standard conformance 117
20 Mechanical data 119
20.1 General mechanical data 119
20.2 Connectors 120
21 Mounting methods 122
21.1 Flush mounting 123
21.1.1 Flush mounting of 84 HP and 42 HP single rack 123
21.1.2 Flush mounting of 42 HP double rack 125
21.1.3 Flush mounting of 24 HP panel instrument case 126
21.2 Rack mounting 127
21.2.1 Rack mounting of 84 HP and 42 HP single rack 127
21.2.2 Rack mounting of 42 HP double rack 129
21.3 Semi-flush mounting 130

21.3.1 Semi-flush mounting of 84 HP single rack 130
21.3.2 Semi-flush mounting of 42 HP single rack 131
21.3.3 Semi-flush mounting of 24 HP panel instrument case 132
21.4 Wall mounting of 42 HP and 84 HP devices 133
21.5 Din rail mounting of 24 HP panel instrument case 135
21.6 IP54 rated mounting kit 136
21.7 Fold-down mounting 138
21.7.1 Fold-down mounting without terminals 138
21.7.2 Fold-down mounting with terminals 140
21.8 No mounting 141
21.9 Remote HMI devices 142
22 Product availability (special and obsolete modules) 143
22.1 Previous 42HP and 84HP device housings 147

1 System design

The EuroProt+ protection device family is a scalable hardware platform to adapt to different applications. Data exchange is performed via a 16-bit high-speed digital non-multiplexed parallel bus with the help of a backplane module.

Each module is identified by its location and there is no difference between module slots in terms of functionality. The only restriction is the position of the CPU module because it is limited to the “CPU” position. The built-in self-supervisory function minimizes the risk of device malfunctions.

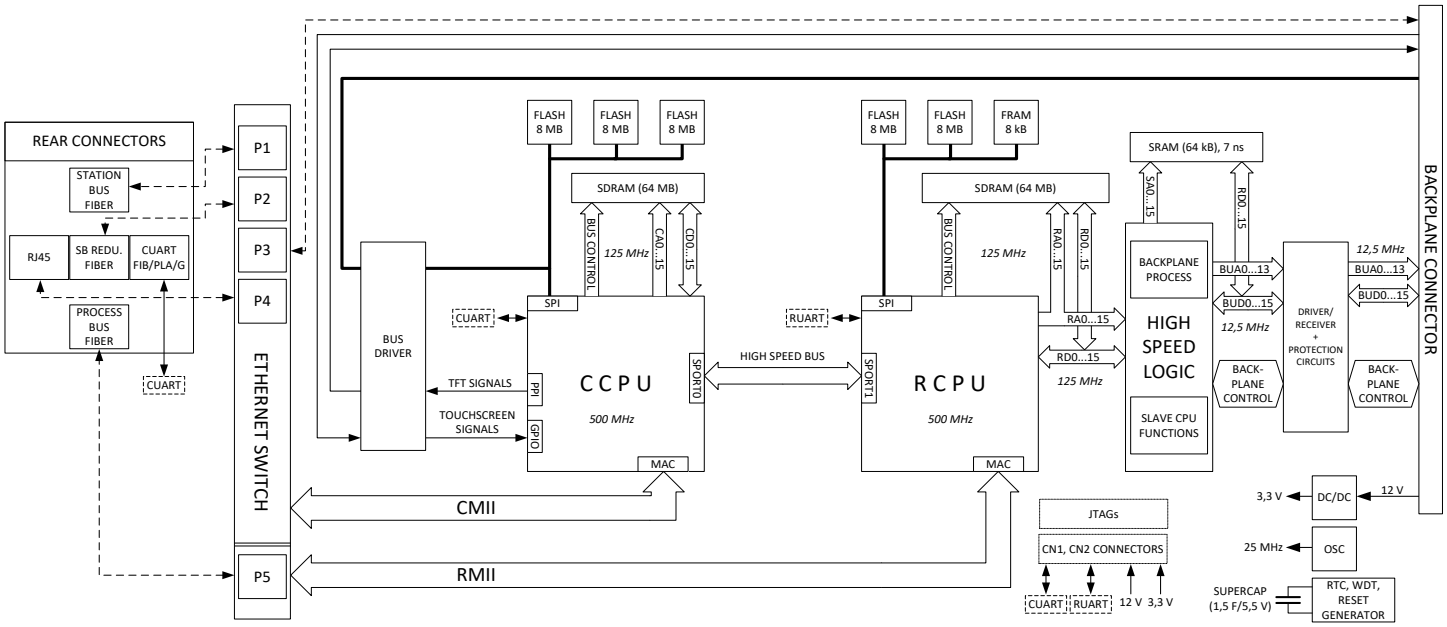

Figure 1-1 CPU block diagram

The backplane board itself is a passive board, but it provides a 16-bit bus, power supply distribution, a two-wire interface (TWI) supporting module inventory management and module identification. It is designed to meet the requirements for high-speed digital buses and to comply with electromagnetic emission standards.

The sampling rate of the CT/VT modules, unless specified otherwise, is 40 samples/cycle (2 kHz at 50 Hz and 2.4 kHz at 60 Hz).

2 CPU and COM module

2.1 CPU+ module

The CPU module contains all the protection, control and communication functions of the EuroProt+ device. Dual* 500 MHz high-performance Analog Devices Blackfin processors separate relay functions (RDSP) from communication and HMI functions (CDSP). Reliable communication between processors is performed via high-speed synchronous serial internal bus (SPORT).

Each processor has its own operative memory such as SDRAM and flash memories for configuration, parameter and firmware storage. Both firmware is stored in a dedicated flash memory independent from the disturbance recorder and event storage.

The CDSP's operating system (uClinux) utilizes a robust JFFS flash file system, which enables fail-safe operation and the storage of disturbance record files, configuration and parameters.

The RDSP core runs at 500 MHz and its external bus speed is 125 MHz. The backplane data speed is limited to approx. 20 MHz, which is more than enough for module data throughput. An additional logic element (CPLD* and SRAM) is used as a bridge between the RDSP and the backplane. The CPLD* collects analogue samples from CT/VT modules and also controls signaling outputs and inputs.

**Notes for newer CPU modules (with labels CPU+/xxx2 and CPU+/xxx2S):*

- The communication and HMI functions (CDSP) run on a different, stronger 1 GHz Texas Instruments Sitara processor instead of the Blackfin,
- Instead of CPLD, FPGA is utilized.
- Only these CPU modules support firmware versions higher than 2.10.3020
- These CPU modules are fully compatible with all 2.8.13.xxxx firmware versions. Since the RDSP is the same for both CPU variants, using one or the other CPU module does not affect the performance of the relay protection functions.

2.1.1 Fast start-up

After power-up the RDSP processor starts up with the previously saved configuration and parameters. Generally, the power-up procedure for the RDSP and relay functions takes only a few seconds. That is to say, it is ready to trip within this time. CDSP's start-up procedure is longer because its operating system needs time to build its file system, initializing user applications such as HMI functions and the IEC61850 software stack.

2.1.2 HMI and communication tasks

- Embedded WEB-server:
  - Firmware upgrade possibility
  - Modification of user parameters
  - Events list and disturbance records
  - Password management
  - Online data measurement
  - Commands
  - Administrative tasks
- Front panel TFT display handling: the interactive menu set is available through the TFT and the touchscreen interface
- User keys: capacitive touch keys on front panel
- The built-in 5-port Ethernet switch allows EuroProt+ to connect to IP/Ethernet-based networks. The following Ethernet ports are available:
  - Station bus (100Base-FX Ethernet) SBW
  - Redundant station bus (100Base-FX Ethernet) SBR
  - Process bus (100Base-FX Ethernet)
  - EOB2 (Ethernet Over Board) or RJ-45 Ethernet user interface on front panel
  - Optional 10/100Base-T port via RJ-45 connector
- PRP/HSR seamless redundancy for Ethernet networking (100Base-FX Ethernet)
- IEEE802.1w (RSTP, STP) standard supported by onboard Ethernet chipset (only on marked modules, see the table below).
- Other communication:
  - RS422/RS485 interfaces (galvanic interface to support legacy or other serial protocols, ASIF)
  - Plastic or glass fiber interfaces to support legacy protocols, ASIF
  - Proprietary process bus communication controller on COM+ module
  - Telecommunication interfaces: G.703, IEEE C37.94

CPU VERSION	PORT 1		PORT 2	PORT 3		SECURE BOOT CAPABILITY
	A	B		A	B	
CPU+/0007	-		-	-		-
CPU+/0091*	-		-	+ SM SH		-
CPU+/0201*	-		+ RJ45	-		-
CPU+/0211*	-		+ RJ45	+ MM		-
CPU+/0281*	-		+ RJ45	+ SM LH		-
CPU+/0291*	-		+ RJ45	+ SM SH		-
CPU+/0301	-		+ POF**	-		-
CPU+/0401	-		+ GS**	-		-
CPU+/0501*	-		+ Galv. RS485/422**	-		-
CPU+/1001	+ MM		-	-		-
CPU+/1004	+ MM		-	-		-
CPU+/1011	+ MM		-	+ MM		-
CPU+/1091*	+ MM		-	+ SM SH		-
CPU+/1101*	+ MM		+ MM	-		-
CPU+/1111*	+ MM		+ MM	+ MM		-
CPU+/1181*	+ MM		+ MM	+ SM LH		-
CPU+/1191*	+ MM		+ MM	+ SM SH		-
CPU+/1201*	+ MM		+ RJ45	-		-
CPU+/1211	+ MM		+ RJ45	+ MM		-
CPU+/1281*	+ MM		+ RJ45	+ SM LH		-
CPU+/1291*	+ MM		+ RJ45	+ SM SH		-
CPU+/1301*	+ MM		+ POF**	-		-
CPU+/1311*	+ MM		+ POF**	+ MM		-
CPU+/1331	+ MM		+ double POF**	-		-
CPU+/1381	+ MM		+ POF**	+ SM LH		-
CPU+/1391*	+ MM		+ POF**	+ SM SH		-
CPU+/1401	+ MM		+ GS**	-		-
CPU+/1411	+ MM		+ GS**	+ MM		-
CPU+/1481	+ MM		+ GS**	+ SM LH		-
CPU+/1491	+ MM		+ GS**	+ SM SH		-
CPU+/1501*	+ MM		+ Galv. RS485/422**	-		-

CPU VERSION	PORT 1		PORT 2	PORT 3		SECURE BOOT CAPABILITY
	A	B		A	B	
CPU+/1511	+ MM		+ Galv. RS485/422**	+ MM		-
CPU+/1581*	+ MM		+ Galv. RS485/422**	+ SM LH		-
CPU+/1611	+ MM		+ Galvanic sync**	+ MM		-
CPU+/1681	+ MM		+ Galvanic sync**	+ SM LH		-
CPU+/6001*	+ MM/LC		-	-		-
CPU+/6004	+ MM/LC		-	-		-
CPU+/6093	+ MM/LC		-	+ SM SH		-
CPU+/6094	+ MM/LC		-	+ SM SH		-
CPU+/6201*	+ MM/LC		+ RJ45	-		-
CPU+/6294	+ MM/LC		+ RJ45	+ SM SH		-
CPU+/6501T	+ MM/LC		+ Galv. RS485/422**	-		-
CPU+/6601*	+ MM/LC		+ MM/LC	-		-
CPU+/6691	+ MM/LC		+ MM/LC	+ SM SH		-
CPU+/9201*	+ SM SH		+ RJ45	-		-
CPU+/9291	+ SM SH		+ RJ45	+ SM SH		-
CPU+/9501	+ SM SH		+ Galv. RS485/422**	-		-
CPU+/9901	+ SM SH		+ SM SH	-		-
CPU+/A001*	+ MM/LC PRP/HSR		-	-		-
CPU+/A004	+ MM/LC PRP/HSR		-	-		-
CPU+/A011*	+ MM/LC PRP/HSR		-	+ MM		-
CPU+/A081	+ MM/LC PRP/HSR		-	+ SM LH		-
CPU+/A091*	+ MM/LC PRP/HSR		-	+ SM SH		-
CPU+/A094	+ MM/LC PRP/HSR		-	+ SM SH		-

Note: the modules can be equipped with a different handle (narrower and made of aluminum, instead of the standard plastic), if the other modules of the device are equipped with top-screw terminals (see Chapter 20.2). In these cases, a "T" letter appears on the label of the module (e.g. **CPU+/1201T), but all other properties remain the same.*
***Legacy port/protocol*

The CPU+/xxx4 cards are for special use.

CPU VERSION	PORT 1		PORT 2	PORT 3		SECURE BOOT CAPABILITY
	A	B		A	B	
CPU+/0202	-		+ RJ45	-		+
CPU+/0212S	-		+ RJ45	+ MM		+
CPU+/0292	-		+ RJ45	+ SM SH		-
CPU+/0402S	-		+ GS*	-		+
CPU+/0502S	-		+ Galv. RS485/422*	-		+
CPU+/1002	+ MM		-	-		+
CPU+/1102	+ MM		+ MM	-		+
CPU+/1182	+ MM		+ MM	+ SM LH		-
CPU+/1192	+ MM		+ MM	+ SM SH		+
CPU+/1202	+ MM		+ RJ45	-		+
CPU+/1212S	+ MM		+ RJ45	+ MM		+
CPU+/1292	+ MM		+ RJ45	+ SM SH		-
CPU+/1302	+ MM		+ POF*	-		+
CPU+/1402S	+ MM		+ GS*			+
CPU+/1502	+ MM		+ Galv. RS485/422*	-		+
CPU+/15F2S	+ MM		+ Galv. RS485/422*	SFP		+
CPU+/2202	+ RJ45		+ RJ45	-		+
CPU+/2292	+ RJ45		+ RJ45	+ SM SH		-
CPU+/22E2S	+ RJ45		+ RJ45	SFP***		+
CPU+/22F2S	+ RJ45		+ RJ45	SFP		+
CPU+/2402S	+ RJ45		+ GS*	-		+
CPU+/2502	+ RJ45		+ Galv. RS485/422*	-		-
CPU+/6002	+ MM/LC		-	-		+
CPU+/6092	+ MM/LC		-	+ SM SH		+
CPU+/6202S	+ MM/LC		+ RJ45	-		+
CPU+/6302S	+ MM/LC		+ POF*	-		+
CPU+/6502S	+ MM/LC		+ Galv. RS485/422*	-		+
CPU+/9202	+ SM SH		+ RJ45	-		-
CPU+/A0G2S	+ MM/LC PRP/HSR		-	+ MM/LC**		+
CPU+/A002	+ MM/LC PRP/HSR		-	-		+
CPU+/A012	+ MM/LC PRP/HSR		-	+ MM		+

CPU VERSION	PORT 1		PORT 2	PORT 3		SECURE BOOT CAPABILITY
	A	B		A	B	
CPU+/A062	+ MM/LC PRP/HSR		-	+ MM/LC		-
CPU+/A092	+ MM/LC PRP/HSR		-	+ SM SH		+
CPU+/A0F2	+ MM/LC PRP/HSR		-	+ double SFP		+
CPU+/A202	+ MM/LC PRP/HSR		+ RJ45	-		+
CPU+/A212	+ MM/LC PRP/HSR		+ RJ45	+ MM		-
CPU+/A282S	+ MM/LC PRP/HSR		+ RJ45	+ SM LH		+
CPU+/A292	+ MM/LC PRP/HSR		+ RJ45	+ SM SH		+
CPU+/A2F2	+ MM/LC PRP/HSR		+ RJ45	+ double SFP		+
CPU+/F0D2	+ double SFP		-	SFP**		-
CPU+/F0F2S	+ double SFP		-	+ double SFP		+
CPU+/F202	+ double SFP		+ RJ45	-		+
CPU+/F292	+ double SFP		+ RJ45	+ SM SH		-
CPU+/F2E2S	+ double SFP		+ RJ45	SFP(1X)***		+
CPU+/F2F2S	+ double SFP		+ RJ45	SFP (2X)		+

**Legacy port/protocol*
***Connected to the station bus, instead of the process bus*
****Double SFP, but only one of them is in use*

The last column shows which CPU modules have secure boot capability (+). Out of these the CPU versions ending with the letter S are only available with secure boot capability (e.g. CPU+/F2E2S). The others without the S marking are obtainable with or without a secure boot capability (e.g. CPU+/F2F2 és CPU+/F2F2S).

For legacy CPU cards (e.g. CPU+0001) see *Product availability* chapter.

PRP/HSR (if ordered) and **RSTP** are supported by the following CPUs:

CPU+/1102	CPU+/A202
CPU+/1102S	CPU+/A202S
CPU+/1182	CPU+/A212
CPU+/2202S	CPU+/A282S
CPU+/22E2S	CPU+/A292
CPU+/22F2S	CPU+/A292S
CPU+/A0G2S	CPU+/A2F2
CPU+/A002	CPU+/A2F2S
CPU+/A002S	CPU+/F0D2
CPU+/A012	CPU+/F0F2S
CPU+/A012S	CPU+/F202
CPU+/A062	CPU+/F202S
CPU+/A092	CPU+/F292
CPU+/A092S	CPU+/F2E2S
CPU+/A0F2	CPU+/F2F2S
CPU+/A0F2S	

Legend for CPU version table:

MM: Multimode with ST connector	**GS**: Glass with ST connector
MM/LC: Multimode with LC connector	**SFP**: Small Form-factor Pluggable connector
SM: Single mode with FC/PC connector	**SB**: Station Bus
LH: Long Haul with FC/PC connector	**SBW**: Station Bus Working
SH: Short Haul with FC/PC connector	**SBR**: Station Bus Redundant
POF: Plastic Optical Fiber with 1 mm fiber connector	**PB**: Proprietary Process Bus

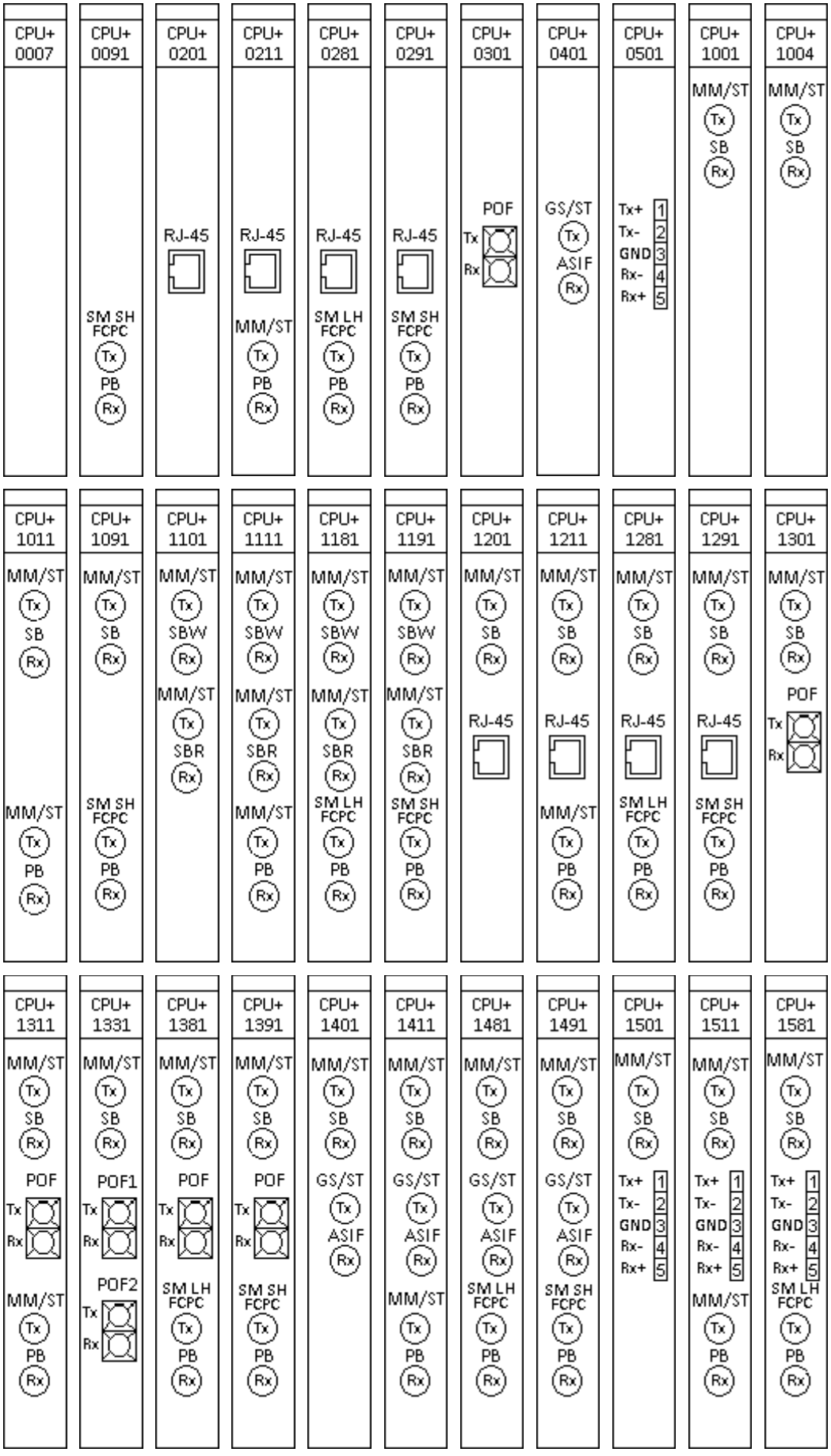
CPU+ 0007
CPU+ 0091
SM SH FCPC
Tx
PB
Rx
CPU+ 0201
RJ-45
CPU+ 0211
RJ-45
MM/ST
CPU+ 0281
RJ-45
SM LH FCPC
CPU+ 0291
RJ-45
SM SH FCPC
CPU+ 0301
POF
CPU+ 0401
GS/ST
ASIF
CPU+ 0501
Tx+ 1
Tx- 2
GND 3
Rx- 4
Rx+ 5
CPU+ 1001
MM/ST
SB
CPU+ 1004
CPU+ 1011
MM/ST
SB
CPU+ 1091
CPU+ 1101
SBW
SBR
CPU+ 1111
CPU+ 1181
CPU+ 1191
CPU+ 1201
CPU+ 1211
CPU+ 1281
CPU+ 1291
CPU+ 1301
CPU+ 1311
CPU+ 1331
POF1
POF2
CPU+ 1381
CPU+ 1391
CPU+ 1401
CPU+ 1411
CPU+ 1481
CPU+ 1491
CPU+ 1501
CPU+ 1511
CPU+ 1581

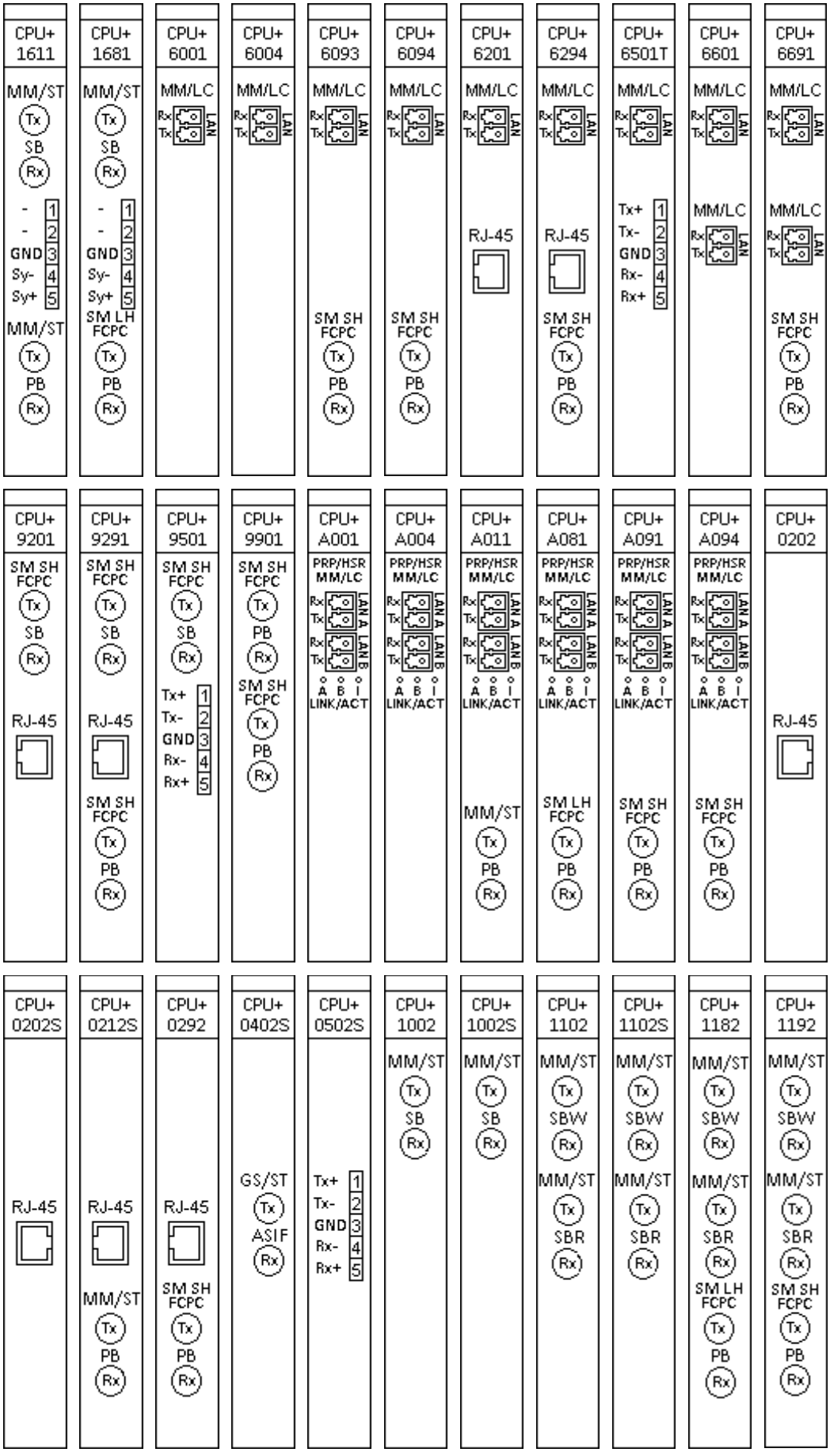
CPU+ 1611
MM/ST
Tx
SB
Rx
- 1
- 2
GND 3
Sy- 4
Sy+ 5
MM/ST
Tx
PB
Rx
CPU+ 1681
MM/ST
Tx
SB
Rx
- 1
- 2
GND 3
Sy- 4
Sy+ 5
SM LH FCPC
Tx
PB
Rx
CPU+ 6001
MM/LC
Rx
Tx
LAN
CPU+ 6004
MM/LC
Rx
Tx
LAN
CPU+ 6093
MM/LC
Rx
Tx
LAN
SM SH FCPC
Tx
PB
Rx
CPU+ 6094
MM/LC
Rx
Tx
LAN
SM SH FCPC
Tx
PB
Rx
CPU+ 6201
MM/LC
Rx
Tx
LAN
RJ-45
CPU+ 6294
MM/LC
Rx
Tx
LAN
RJ-45
SM SH FCPC
Tx
PB
Rx
CPU+ 6501T
MM/LC
Rx
Tx
LAN
Tx+ 1
Tx- 2
GND 3
Rx- 4
Rx+ 5
CPU+ 6601
MM/LC
Rx
Tx
LAN
MM/LC
Rx
Tx
LAN
CPU+ 6691
MM/LC
Rx
Tx
LAN
MM/LC
Rx
Tx
LAN
SM SH FCPC
Tx
PB
Rx
CPU+ 9201
SM SH FCPC
Tx
SB
Rx
RJ-45
CPU+ 9291
SM SH FCPC
Tx
SB
Rx
RJ-45
SM SH FCPC
Tx
PB
Rx
CPU+ 9501
SM SH FCPC
Tx
SB
Rx
Tx+ 1
Tx- 2
GND 3
Rx- 4
Rx+ 5
CPU+ 9901
SM SH FCPC
Tx
PB
Rx
SM SH FCPC
Tx
PB
Rx
CPU+ A001
PRP/HSR MM/LC
Rx
Tx
LAN A
Rx
Tx
LAN B
A B I
LINK/ACT
CPU+ A004
PRP/HSR MM/LC
Rx
Tx
LAN A
Rx
Tx
LAN B
A B I
LINK/ACT
CPU+ A011
PRP/HSR MM/LC
Rx
Tx
LAN A
Rx
Tx
LAN B
A B I
LINK/ACT
MM/ST
Tx
PB
Rx
CPU+ A081
PRP/HSR MM/LC
Rx
Tx
LAN A
Rx
Tx
LAN B
A B I
LINK/ACT
SM LH FCPC
Tx
PB
Rx
CPU+ A091
PRP/HSR MM/LC
Rx
Tx
LAN A
Rx
Tx
LAN B
A B I
LINK/ACT
SM SH FCPC
Tx
PB
Rx
CPU+ A094
PRP/HSR MM/LC
Rx
Tx
LAN A
Rx
Tx
LAN B
A B I
LINK/ACT
SM SH FCPC
Tx
PB
Rx
CPU+ 0202
RJ-45
CPU+ 0202S
RJ-45
CPU+ 0212S
RJ-45
MM/ST
Tx
PB
Rx
CPU+ 0292
RJ-45
SM SH FCPC
Tx
PB
Rx
CPU+ 0402S
GS/ST
Tx
ASIF
Rx
CPU+ 0502S
Tx+ 1
Tx- 2
GND 3
Rx- 4
Rx+ 5
CPU+ 1002
MM/ST
Tx
SB
Rx
CPU+ 1002S
MM/ST
Tx
SB
Rx
CPU+ 1102
MM/ST
Tx
SBW
Rx
MM/ST
Tx
SBR
Rx
CPU+ 1102S
MM/ST
Tx
SBW
Rx
MM/ST
Tx
SBR
Rx
CPU+ 1182
MM/ST
Tx
SBW
Rx
MM/ST
Tx
SBR
Rx
SM LH FCPC
Tx
PB
Rx
CPU+ 1192
MM/ST
Tx
SBW
Rx
MM/ST
Tx
SBR
Rx
SM SH FCPC
Tx
PB
Rx

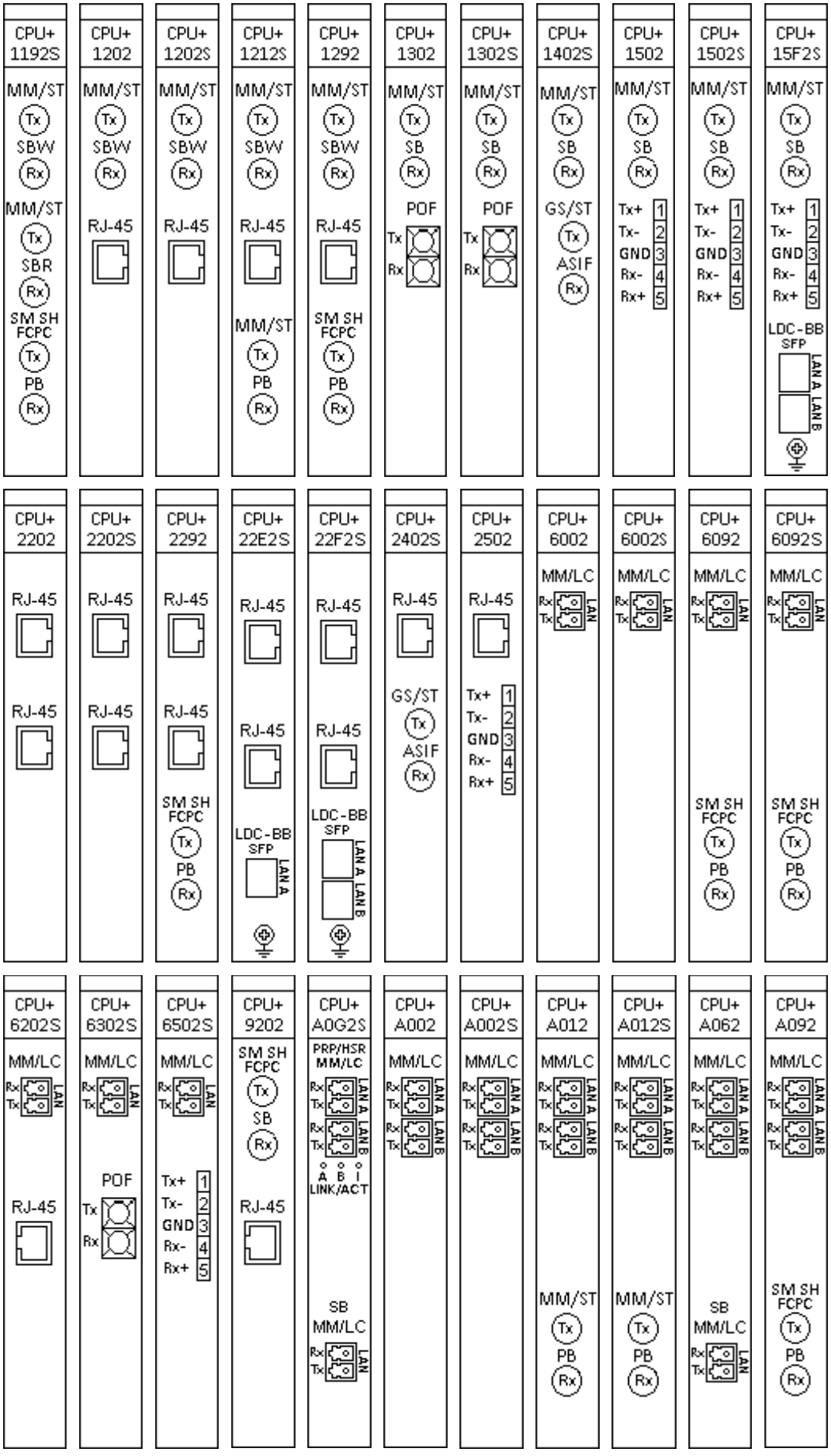
CPU+ 1192S
MM/ST
Tx
SBW
Rx
MM/ST
Tx
SBR
Rx
SM SH FCPC
Tx
PB
Rx
CPU+ 1202
MM/ST
Tx
SBW
Rx
RJ-45
CPU+ 1202S
MM/ST
Tx
SBW
Rx
RJ-45
CPU+ 1212S
MM/ST
Tx
SBW
Rx
RJ-45
MM/ST
Tx
PB
Rx
CPU+ 1292
MM/ST
Tx
SBW
Rx
RJ-45
SM SH FCPC
Tx
PB
Rx
CPU+ 1302
MM/ST
Tx
SB
Rx
POF
Tx
Rx
CPU+ 1302S
MM/ST
Tx
SB
Rx
POF
Tx
Rx
CPU+ 1402S
MM/ST
Tx
SB
Rx
GS/ST
Tx
ASIF
Rx
CPU+ 1502
MM/ST
Tx
SB
Rx
Tx+ 1
Tx- 2
GND 3
Rx- 4
Rx+ 5
CPU+ 1502S
MM/ST
Tx
SB
Rx
Tx+ 1
Tx- 2
GND 3
Rx- 4
Rx+ 5
CPU+ 15F2S
MM/ST
Tx
SB
Rx
Tx+ 1
Tx- 2
GND 3
Rx- 4
Rx+ 5
LDC-BB SFP
LAN A
LAN B
CPU+ 2202
RJ-45
RJ-45
CPU+ 2202S
RJ-45
RJ-45
CPU+ 2292
RJ-45
RJ-45
SM SH FCPC
Tx
PB
Rx
CPU+ 22E2S
RJ-45
RJ-45
LDC-BB SFP
LAN A
CPU+ 22F2S
RJ-45
RJ-45
LDC-BB SFP
LAN A
LAN B
CPU+ 2402S
RJ-45
GS/ST
Tx
ASIF
Rx
CPU+ 2502
RJ-45
Tx+ 1
Tx- 2
GND 3
Rx- 4
Rx+ 5
CPU+ 6002
MM/LC
Rx
Tx
LAN
CPU+ 6002S
MM/LC
Rx
Tx
LAN
CPU+ 6092
MM/LC
Rx
Tx
LAN
SM SH FCPC
Tx
PB
Rx
CPU+ 6092S
MM/LC
Rx
Tx
LAN
SM SH FCPC
Tx
PB
Rx
CPU+ 6202S
MM/LC
Rx
Tx
LAN
RJ-45
CPU+ 6302S
MM/LC
Rx
Tx
LAN
POF
Tx
Rx
CPU+ 6502S
MM/LC
Rx
Tx
LAN
Tx+ 1
Tx- 2
GND 3
Rx- 4
Rx+ 5
CPU+ 9202
SM SH FCPC
Tx
SB
Rx
RJ-45
CPU+ A0G2S
PRP/HSR MM/LC
Rx
Tx
LAN A
LAN B
Rx
Tx
A B I
LINK/ACT
SB MM/LC
Rx
Tx
LAN
CPU+ A002
MM/LC
Rx
Tx
LAN A
LAN B
Rx
Tx
CPU+ A002S
MM/LC
Rx
Tx
LAN A
LAN B
Rx
Tx
CPU+ A012
MM/LC
Rx
Tx
LAN A
LAN B
Rx
Tx
MM/ST
Tx
PB
Rx
CPU+ A012S
MM/LC
Rx
Tx
LAN A
LAN B
Rx
Tx
MM/ST
Tx
PB
Rx
CPU+ A062
MM/LC
Rx
Tx
LAN A
LAN B
Rx
Tx
SB MM/LC
Rx
Tx
LAN
CPU+ A092
MM/LC
Rx
Tx
LAN A
LAN B
Rx
Tx
SM SH FCPC
Tx
PB
Rx

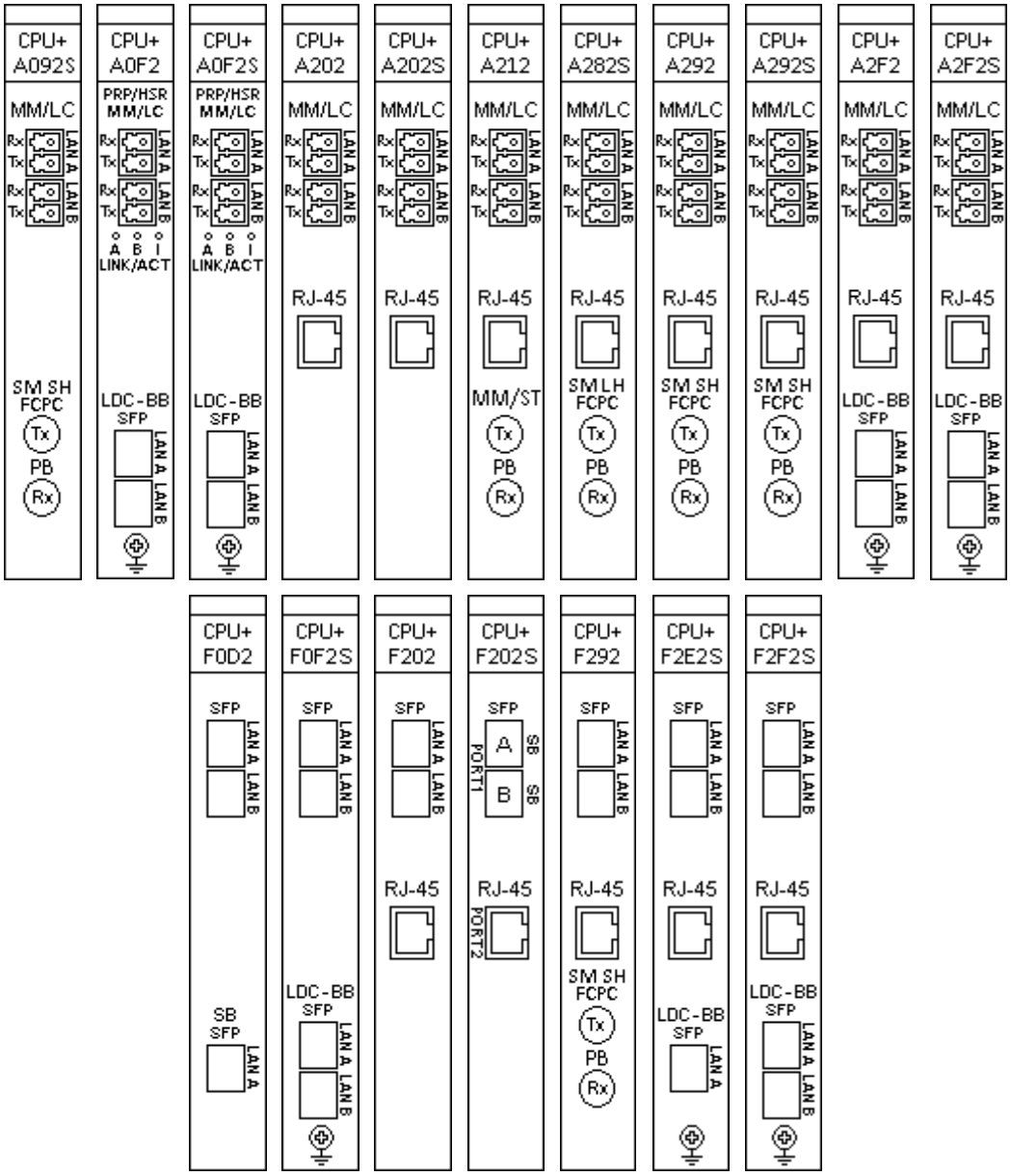

Figure 2-1 CPU versions

Interface types:

- 100Base-FX Ethernet:
  - MM/ST 1300 nm, 50/62.5/125 µm connector, (up to 2 km) fiber
  - SM/FC 1550 nm, 9/125 µm connector, (LH: long haul, up to 120 km)
  - SM/FC 1550 nm, 9/125 µm connector, (SH: short haul, up to 50 km)
  - MM/LC 1300 nm, 50/62.5/125 µm connector, (up to 2 km) fiber
  - SFP
    - MM/LC 1300nm
    - RAD E1 (G703, 2 Mbit/s)
    - SM/LC 1550nm, -12dBm to -6dBm, short haul use
    - SM/LC 1550nm, -5dBm to 0dBm, long haul use
    - RJ45
- 10/100 Base-TX Ethernet: RJ-45-8/8
- Service port on HMI:
  - 10/100 Base-T Ethernet: RJ-45-8/8
  - EOB2 interface: attachable to the front panel by a proprietary magnetic connector; the connector box ends in a RJ-45 8/8 plug. It is 10Base-T full duplex interface, and it enables 10/100Base TX communication with service computers.
- ASIF: Asynchronous Serial Interface
  - plastic optical fiber (ASIF-POF)
  - glass with ST connector (ASIF-GS)
  - galvanic RS485/422 (ASIF-G)

2.2 COM modules

The COM+ modules are responsible for special communication tasks, these are the following:

- binary signal transmission
- line differential protection communication via Ethernet or telecommunication networks
- busbar differential protection communication
- multi-port Ethernet switch using MODBUS/TCP protocol for Remote I/O (RIO) servers

2.2.1 COM modules for binary signal transmission

MODULE TYPE	INTERFACE TYPE	NUMBER OF INTERFACES	UNIT WIDTH	APPLICATION
COM+/1801*	MM/ST 1300 nm, 50/62.5/125 µm and SM/FC 1550 nm, 9/125 µm connector, 100Base-FX Ethernet	2	4 HP	Line differential protection, binary signal transmission up to 2 km and up to 120 km
COM+/1901*	MM/ST 1300 nm, 50/62.5/125 µm and SM/FC 1550 nm, 9/125 µm connector, 100Base-FX Ethernet	2	4 HP	Line differential protection, binary signal transmission up to 2 km and up to 50 km
COM+/8882	SM/FC 1550 nm, 9/125 µm connector, 100Base-FX Ethernet	3	4 HP	3 direction binary signal transmission up to 120 km
COM+/9902*	SM/FC 1550 nm, 9/125 µm connector, 100Base-FX Ethernet	2	4 HP	2 direction binary signal transmission up to 50 km
COM+/9992*	SM/FC 1550 nm, 9/125 µm connector, 100Base-FX Ethernet	3	4 HP	3 direction binary signal transmission up to 50 km

Note: the modules can be equipped with a different handle (narrower and made of aluminum, instead of the standard plastic), if the other modules of the device are equipped with top-screw terminals (see Chapter 20.2). In these cases, a "T" letter appears on the label of the module (e.g. **COM+/1801T), but all other properties remain the same.*

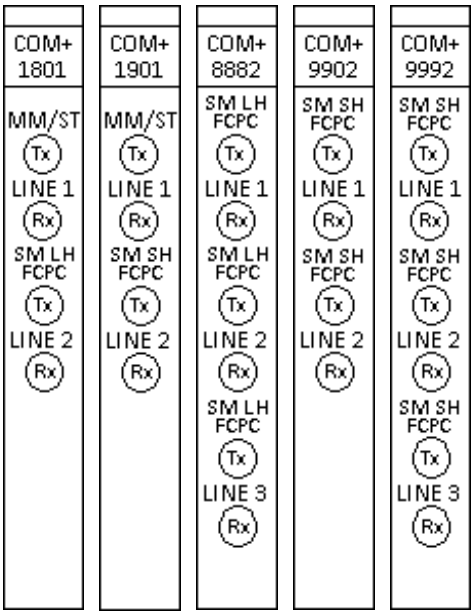

Figure 2-2 COM modules for binary signal transmission

2.2.2 COM modules for line differential communication

MODULE TYPE	INTERFACE TYPE	NUMBER OF INTERFACES	UNIT WIDTH	APPLICATION
COM+/0091	G703.1 (64 kbit/s)	1	4 HP	Line differential protection via telecom network
COM+/1101	MM/ST 1300 nm, 50/62.5/125 µm connector, 100Base-FX Ethernet	2	4 HP	3 terminals / redundant line differential protection up to 2 km
COM+/1801*	MM/ST 1300 nm, 50/62.5/125 µm and SM/FC 1550 nm, 9/125 µm connector, 100Base-FX Ethernet	2	4 HP	3 terminals / redundant line differential protection up to 2 km and up to 120 km
COM+/1901*	MM/ST 1300 nm, 50/62.5/125 µm and SM/FC 1550 nm, 9/125 µm connector, 100Base-FX Ethernet	2	4 HP	3 terminals / redundant line differential protection up to 2 km and up to 50 km
COM+/8801*	SM/FC 1550 nm, 9/125 µm connector, 100Base-FX Ethernet	2	4 HP	3 terminals / redundant line differential protection up to 120 km
COM+/9901*	SM/FC 1550 nm, 9/125 µm connector, 100Base-FX Ethernet	2	4 HP	3 terminals / redundant line differential protection up to 50 km

Note: the modules can be equipped with a different handle (narrower and made of aluminum, instead of the standard plastic), if the other modules of the device are equipped with top-screw terminals (see Chapter 20.2). In these cases, a "T" letter appears on the label of the module (e.g.* ***COM+/1801T**), but all other properties remain the same.*

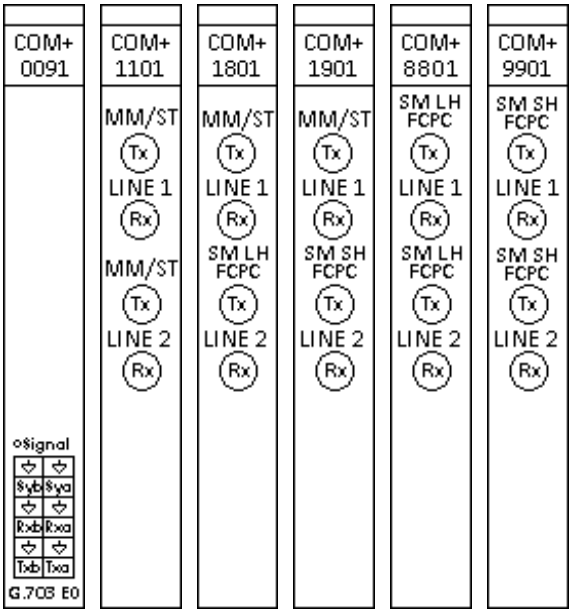

Figure 2-3 COM modules for line differential applications

2.2.3 COM modules for busbar differential protection communication

MODULE TYPE	INTERFACE TYPE	NUMBER OF INTERFACES	UNIT WIDTH	APPLICATION
COM+/1111*	MM/ST 1300 nm, 50/62.5/125 µm connector, 100Base-FX Ethernet	3	4 HP	Busbar protection for 3 bay units up to 2 km
COM+/1111D	MM/ST 1300 nm, 50/62.5/125 µm connector, 100Base-FX Ethernet	3	4 HP	Busbar protection for 3x2 bay units (dual) up to 2 km

Note: the modules can be equipped with a different handle (narrower and made of aluminum, instead of the standard plastic), if the other modules of the device are equipped with top-screw terminals (see Chapter 20.2). In these cases, a "T" letter appears on the label of the module (e.g. **COM+/1801T), but all other properties remain the same.*

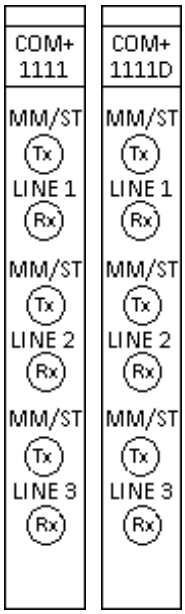

Figure 2-4 COM modules for busbar differential protections

2.2.4 COM modules for Remote I/O (RIO) servers

MODULE TYPE	INTERFACE TYPE	NUMBER OF INTERFACES	UNIT WIDTH	APPLICATION
COM+/1202**	MM/LC 1300 nm, 50/62.5/125 µm connector, 100Base-FX Ethernet	2	8 HP	2-port Ethernet switch for MODBUS via RIO
COM+/1324**	MM/LC 1300 nm, 50/62.5/125 µm connector, 100Base-FX Ethernet	4	8 HP	4-port Ethernet switch for MODBUS via RIO
COM+/1335*	MM/LC 1300 nm, 50/62.5/125 µm connector, 100Base-FX Ethernet	5	8 HP	5-port Ethernet switch for MODBUS via RIO
COM+/6603*	MM/LC 1300 nm, 50/62.5/125 µm connector, 100Base-FX Ethernet	2	4 HP	2-port Ethernet switch for MODBUS via RIO
COM+/6663*	MM/LC 1300 nm, 50/62.5/125 µm connector, 100Base-FX Ethernet	3	4 HP	3-port Ethernet switch for MODBUS via RIO

Note: the modules can be equipped with a different handle (narrower and made of aluminum, instead of the standard plastic), if the other modules of the device are equipped with top-screw terminals (see Chapter 20.2). In these cases, a "T" letter appears on the label of the module (e.g. **COM+/1801T), but all other properties remain the same.*

*****Obsolete module. These modules are not recommended for new designs!***

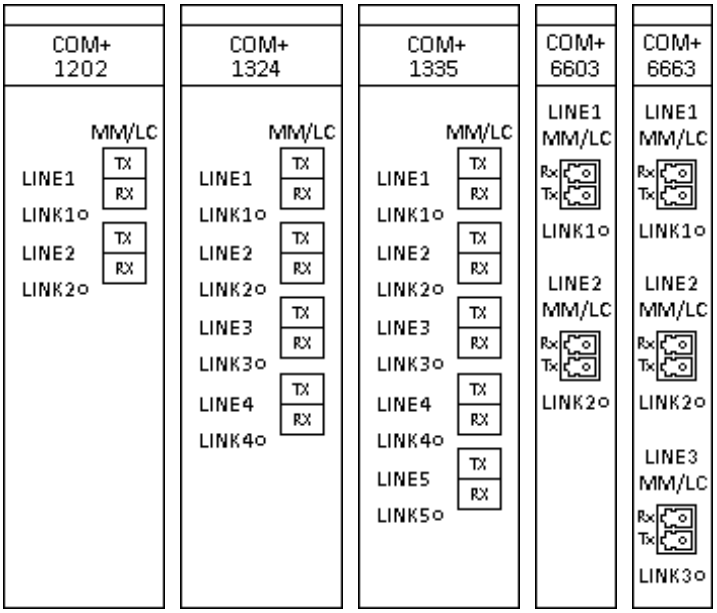

Figure 2-5 COM modules for RIO servers

2.3 Communication interface characteristics

2.3.1 Ethernet multi-mode transmitter and receiver

2.3.1.1 MM/ST connector

Up to approximately 2 km.

Transmitter

PARAMETER	SYMBOL	MIN.	TYP.	MAX.	UNIT
OPTICAL OUTPUT POWER 62.5/125 µm, NA = 0.275 FIBER	P_O	BOL*: -19 EOL*: -20	-	-14	dBm avg.
OUTPUT OPTICAL POWER 50/125 µm, NA = 0.20 FIBER	P_O	BOL*: -22.5 EOL*: -23.5	-	-14	dBm avg.
OPTICAL EXTINCTION RATIO	ER	-	-	10 -10	% dB
CENTER WAVELENGTH	λ_C	1270	1308	1380	nm

** **BOL:** Beginning of life, **EOL:** End of life*

*Note: according to field experiences, the **62.5/125 µm** cabling is recommended for applications where the center **wavelength is 1300/1310 nm**.*

Receiver sensitivity is measured with $2^{23} - 1$ PRBS pattern within BER = 2.5×10^{-10}

PARAMETER	SYMBOL	MIN.	TYP.	MAX.	UNIT
SIGNAL DETECT - ASSERTED	P_A	P_D + 1.5 dB	-	-33	dBm avg.
SIGNAL DETECT - DEASSERTED	P_D	-45	-	-	dBm avg.
SIGNAL DETECT - HYSTERESIS	$P_A - P_D$	1.5	-	-	dB
INPUT OPTICAL POWER MAXIMUM	$P_{IN\ Max}$	-14	-	-	dBm avg.
SIGNAL DETECT ASSERT TIME (OFF TO ON)	AS_Max	0	2	100	µs
SIGNAL DETECT DEASSERT TIME (ON TO OFF)	ANS_Max	0	8	350	µs

2.3.1.2 MM/LC connector

Up to approximately 2 km.

Transmitter

PARAMETER	SYMBOL	MIN.	TYP.	MAX.	UNIT
OPTICAL OUTPUT POWER 62.5/125 µm, NA = 0.275 FIBER	P_O	BOL*: -19 EOL*: -20	-15.7	-14	dBm avg.
OUTPUT OPTICAL POWER 50/125 µm, NA = 0.20 FIBER	P_O	BOL*: -22.5 EOL*: -23.5	-	-14	dBm avg.
OPTICAL EXTINCTION RATIO	ER	-	0.002 -47	0.2 -27	% dB
CENTER WAVELENGTH	λ_C	1270	1308	1380	nm

** **BOL:** Beginning of life, **EOL:** End of life*

*Note: according to field experiences, the **62.5/125 µm** cabling is recommended for applications where the **center wavelength is 1300/1310 nm**.*

Receiver sensitivity is measured with $2^{23} - 1$ PRBS pattern within BER = 2.5×10^{-10}

PARAMETER	SYMBOL	MIN.	TYP.	MAX.	UNIT
SIGNAL DETECT - ASSERTED	P_A	P_D + 1.5 dB	-	-33	dBm avg.
SIGNAL DETECT - DEASSERTED	P_D	-45	-	-	dBm avg.
SIGNAL DETECT - HYSTERESIS	$P_A - P_D$	1.5	-	-	dB
SIGNAL DETECT ASSERT TIME (OFF TO ON)	AS_Max	0	2	100	µs
SIGNAL DETECT DEASSERT TIME (ON TO OFF)	ANS_Max	0	5	100	µs

2.3.2 Ethernet single mode transmitter and receiver

2.3.2.1 Long haul single mode transceiver

Up to approximately 120 km, with max. 32 dB link attenuation.

Transmitter

PARAMETER	SYMBOL	MIN.	TYP.	MAX.	UNIT
OPTICAL OUTPUT POWER	P_O	-6	-	0	dBm avg.
OPTICAL EXTINCTION RATIO	ER	8.3	-	-	dB
CENTER WAVELENGTH	λ_C	1490	1550	1610	nm

Receiver sensitivity is measured with $2^{23} - 1$ PRBS pattern within BER = 2.5×10^{-10}

PARAMETER	SYMBOL	MIN.	TYP.	MAX.	UNIT
OPTICAL INPUT SENSITIVITY	P_{IN}	-	-38	-35	dBm avg.
SATURATION	P_{SAT}	-3	0	-	dBm
CENTER WAVELENGTH	λ_C	1100	-	1600	nm
SIGNAL DETECT - ASSERTED	P_A	-	-	-35	dBm avg.
SIGNAL DETECT - DEASSERTED	P_D	-45	-	-	dBm avg.
HYSTERESIS	P_{HYS}	-	3	-	dB

2.3.2.2 Short haul single mode transceiver

Up to approximately 50 km, with max. 27 dB link attenuation.

Transmitter

PARAMETER	SYMBOL	MIN.	TYP.	MAX.	UNIT
OPTICAL OUTPUT POWER	P_O	-12	-	-6	dBm avg.
OPTICAL EXTINCTION RATIO	ER	8.3	-	-	dB
CENTER WAVELENGTH	λ_C	1490	1550	1610	nm

Receiver sensitivity is measured with $2^{23} - 1$ PRBS pattern within BER = 2.5×10^{-10}

PARAMETER	SYMBOL	MIN.	TYP.	MAX.	UNIT
OPTICAL INPUT SENSITIVITY	P_{IN}	-	-38	-35	dBm avg.
SATURATION	P_{SAT}	-3	0	-	dBm
CENTER WAVELENGTH	λ	1100	-	1600	nm
SIGNAL DETECT - ASSERTED	P_A	-	-	-35	dBm avg.
SIGNAL DETECT - DEASSERTED	P_D	-45	-	-	dBm avg.
HYSTERESIS	P_{HYS}	-	3	-	dB

2.3.3 Small Form-factor Pluggable connector (SFP)

The newer CPU modules with SFP inputs support SFPs of different characteristics for all (station bus and process bus) communication-based applications (with some exceptions restricted to COM modules, such as decentralized busbar main units and RIO devices).

Several models have been thoroughly tested to be working well with Protecta devices, see the list below (other SFPs can be utilized as well, however Protecta does not have experience with them):

MANUFACTURER & ID	TYPE
Avago HFBR 57E5APZ	Fiber Optic MM/LC
Appointech TR15SM1-2FLC3MR1F2D	Fiber Optic SM/LC LH
Appointech TR13SM1-1LLC3MR1F2D	Fiber Optic SM/LC SH
LM28-A3C-TI-N-EC	Fiber Optic MM/LC
CM85-2MF-3C-TI-L	Fiber Optic MM/LC
RAD MiRICi-E1/T1	RJ45
Fiberland FLD-S155-TI	RJ45

2.3.3.1 Multi mode transceiver - MM/LC

Avago HFBR 57E5APZ

Transmitter

PARAMETER	SYMBOL	MIN.	TYP.	MAX.	UNIT
OPTICAL OUTPUT POWER 62.5/125 µm, NA = 0.275 FIBER	P_O	-20.0	-17.0	-14.0	dBm avg.
OPTICAL OUTPUT POWER 50/125 µm, NA = 0.20 FIBER	P_O	-23.5	-20.0	-14.0	dBm avg.
OPTICAL EXTINCTION RATIO	ER	10	-	-	dB
CENTER WAVELENGTH	λ_C	1270	1308	1380	nm

Receiver

PARAMETER	SYMBOL	MIN.	TYP.	MAX.	UNIT
OPTICAL INPUT POWER	P_{IN}	-31.0	-	-14.0	dBm
OPERATING WAVELENGTH	λ_R	12 70	-	1380	nm
SIGNAL DETECT - ASSERTED	P_A	-45	-	-	dBm avg.
SIGNAL DETECT – DE-ASSERTED	P_D	-	-	-32.0	dBm avg.
SIGNAL DETECT - HYSTERESIS	$P_A - P_D$	0.5	1.8	-	dB

2.3.3.1.1 MM/LC IEEE C37.94 transceiver

LM28-A3C-TI-N-EC and ***CM85-2MF-3C-TI-L***

PARAMETER	SPECIFICATION
OPTICAL INTERFACE	DUPLEX LC
FIBER TYPE	MULTIMODE
NOMINAL WAVELENGTH	850 NM
TX WAVELENGTH RANGE	830…860 NM
RX WAVELENGTH RANGE	790…870 NM
MAXIMUM DISTANCE	2 KM
TX POWER, 62.5/125 µM	−19…−11 DBM
TX POWER, 50/125 µM	−23…−11 DBM
RX SENSITIVITY	−32 DBM
MAXIMUM RX INPUT LEVEL	−8 DBM
LOS ASSERT	≥ −45 DBM
LOS DEASSERT	≤ −32 DBM
LOS HYSTERESIS	UP TO ~13 DB
EXTINCTION RATIO	≥12 DB
OPERATING TEMPERATURE	−40…+85 °C
DATA RATE	2 MBIT/S
STANDARD	IEEE C37.94
EXTERNAL SFP INTERFACE	STANDARD SFP

2.3.3.2 Long haul, single mode transceiver - SM/LC

Appointech TR15SM1-2FLC3MR1F2D

Up to approximately 104 km, with max. 29 dB link attenuation.

PARAMETER	TR15SM1-2FLC3MR1F2D
OPTICAL INTERFACE	DUPLEX LC
FIBER TYPE	SINGLE-MODE, 9/125 µM
NOMINAL WAVELENGTH	1550 NM
TX WAVELENGTH RANGE	1530…1570 NM
RX WAVELENGTH RANGE	1100…1600 NM
LASER TYPE	DFB LD
TX OUTPUT POWER	−5…0 DBM
RX SENSITIVITY	−34 DBM MAX. (−38 DBM TYP.)
MAXIMUM RX INPUT / SATURATION	−3 DBM
OPTICAL POWER BUDGET	29 DB
RECOMMENDED MAX. REACH	104 KM
LOS ASSERT	≥ −48 DBM
LOS DEASSERT	≤ −34 DBM
LOS HYSTERESIS	0.5 DB MIN., 3 DB TYP.
EXTINCTION RATIO	≥10 DB
DATA RATE	10…250 MB/S, 155 MB/S TYP.
OPERATING TEMPERATURE	−40…+85 °C
STANDARD	SONET OC-3 / SDH STM-1, L-1.2

2.3.3.3 Short haul, single mode transceiver – SM/LC

Appointech TR13SM1-1LLC3MR1F2D

Up to approximately 54 km, with max. 28 dB link attenuation.

PARAMETER	TR13SM1-1LLC3MR1F2D
OPTICAL INTERFACE	DUPLEX LC
FIBER TYPE	SINGLE-MODE, 9/125 µM
NOMINAL WAVELENGTH	1310 NM
TX WAVELENGTH RANGE	1270…1360 NM
RX WAVELENGTH RANGE	1100…1600 NM
LASER TYPE	FP LD
TX OUTPUT POWER	−12…−6 DBM
RX SENSITIVITY	−34 DBM MAX. (−38 DBM TYP.)
MAXIMUM RX INPUT / SATURATION	−3 DBM
OPTICAL POWER BUDGET	22 DB
RECOMMENDED MAX. REACH	54 KM
LOS ASSERT	≥ −48 DBM
LOS DEASSERT	≤ −34 DBM
LOS HYSTERESIS	0.5 DB MIN., 3 DB TYP.
EXTINCTION RATIO	≥10 DB
DATA RATE	10…250 MB/S, 155 MB/S TYP.
OPERATING TEMPERATURE	−40…+85 °C
STANDARD	SONET OC-3 / SDH STM-1, L-1.1

2.3.3.4 RAD E1 (G703, 2 Mbit/s)

RAD MiRICi-E1/T1

PARAMETER	VALUE
FRAME FORMAT	E1 G.732N CRC
COMPLIANCE	G.704, G.775, G.823
DATA RATE	2.048 Mbps
LINE CODE	HDB3
FRAMING	Framed, Unframed (HDLC, cHDLC)
LINE IMPEDANCE	120Ω, balanced
TRANSMIT CLOCK	Receive clock
CONNECTOR	RJ-45
CABLE LENGTH (MAX)	Up to 2500 m (8202 ft) for the AWG 22 cable
E1 RJ45 CONNECTOR PINOUT	The E1/T1 interface terminates in an 8-pin RJ-45 connector, wired as shown in the following table.

E1/T1 Connector Pinout

PIN	FUNCTION
1	Rx Ring
2	Rx Tip
3, 6, 7, 8	-
4	Tx Ring
5	Tx Tip
S=CONN. BODY	FGND/GND

2.3.3.5 RJ45 Small Form-factor Pluggable connector

Fiberland FLD-S155-TI

+3.3V Volt Electrical Power Interface

PARAMETER	SYMBOL	MIN.	TYP.	MAX.	UNIT
SUPPLY CURRENT	I_s	-	320	375	mA
INPUT VOLTAGE	V_{CC}	3.13	3.3	3.47	V
MAXIMUM VOLTAGE	V_{max}	-	-	4	V
SURGE CURRENT	I_{surge}	-	-	30	mA

Low-Speed Signals

PARAMETER	SYMBOL	MIN.	MAX.	UNIT
SFP OUTPUT LOW (MEASURED AT HOST SIDE OF THE CONNECTOR)	VOL	0	0.5	V
SFP OUTPUT HIGH (MEASURED AT HOST SIDE OF THE CONNECTOR)	VOH	host_V_{cc} - 0.5	Host_V_{cc} + 0.3	V
SFP INPUT LOW (MEASURED AT SFP SIDE OF THE CONNECTOR)	VIL	0	0.8	V
SFP INPUT HIGH (MEASURED AT SFP SIDE OF THE CONNECTOR)	VIH	2	V_{cc} + 0.3	V

High-Speed Electrical Interface

PARAMETER	SYMBOL	MIN.	TYP.	MAX.	UNIT
LINE FREQUENCY	fL	-	125	-	MHz
TX OUTPUT IMPEDANCE	Z_{out}, TX	-	100	--	Ohm
RX INPUT IMPEDANCE	Z_{in}, RX	-	100	-	Ohm

PARAMETER	SYMBOL	MIN.	TYP.	MAX.	UNIT
SINGLE ENDED DATA INPUT SWING	V_{insing}	250	-	1200	mV
SINGLE ENDED DATA OUTPUT SWING	$V_{outsing}$	350	-	800	mV
RISE/FALL TIME	T_r, T_f	-	175	-	psec
TX INPUT IMPEDANCE	Z_{in}	-	50	-	Ohm
RX OUTPUT IMPEDANCE	Z_{out}	-	50	-	Ohm

2.3.4 ASIF-O transmitter and receiver

2.3.4.1 ASIF-O POF

Transmitter

PARAMETER	SYMBOL	MIN.	TYP.	MAX.	UNIT	JUMPER SETTINGS
TRANSMITTER OUTPUT OPTICAL POWER	P_T	-15.3	-	-9	dBm	JP1 2-3
		-23.3	-	-17		JP1 1-2
PEAK EMISSION WAVELENGTH	λ_{PK}	-	660	-	nm	
EFFECTIVE DIAMETER	D	-	1	-	mm	
NUMERICAL APERTURE	NA	-	0.5	-		

Receiver

PARAMETER	SYMBOL	MIN.	TYP.	MAX.	UNIT
INPUT OPTICAL POWER LEVEL LOGIC 0	$P_{R(L)}$	-39	-	-13.7	dBm
INPUT OPTICAL POWER LEVEL LOGIC 1	$P_{R(H)}$	-	-	-53	dBm
EFFECTIVE DIAMETER	D	-	1	-	mm
NUMERICAL APERTURE	NA	-	0.5	-	

These characteristics are valid for both POF interfaces in CPU+1331 module.

2.3.4.2 ASIF-O GLASS

Transmitter *(Output measured out of 1 meter of cable)*

PARAMETER	SYMBOL	MIN.	TYP.	MAX.	UNIT	JUMPER SETTINGS
TRANSMITTER OUTPUT OPTICAL POWER 50/125 µm FIBER CABLE NA = 0.2	P_O	-19.4	-16.4	-14.4	dBm peak	JP1 2-3
		-28.9	-25.9	-23.9		JP1 1-2
TRANSMITTER OUTPUT OPTICAL POWER 62.5/125 µm FIBER CABLE NA = 0.275	P_O	-15.6	-12.6	-10.6	dBm peak	JP1 2-3
		-22.9	-19.9	-17.9		JP1 1-2

Receiver

PARAMETER	SYMBOL	MIN.	TYP.	MAX.	UNIT
PEAK OPTICAL INPUT POWER LOGIC LEVEL HIGH *(λ_P = 820 nm)*	P_{RH}	-25.4	-	-9.2	dBm peak
PEAK OPTICAL INPUT POWER LOGIC LEVEL LOW	P_{RL}	-	-	-40	dBm peak

2.3.5 ASIF-G transmitter and receiver

The RS422/RS485 interfaces of our CPU+1501, CPU+1511, CPU+1581, CPU+9501 modules provide galvanic interface to support legacy or other serial protocols. For more details see our RS485/422 application note, available on our homepage.

Transmitter

PARAMETER	SYMBOL	MIN.	TYP.	MAX.	UNIT
DIFFERENTIAL OUTPUT VOLTAGE (LOADED, R_L = 100 Ω, RS422)	V_{OD2}	2	-	3.6	V
DIFFERENTIAL OUTPUT VOLTAGE (LOADED, R_L = 54 Ω, RS485)	V_{OD2}	1.5	-	3.6	V

Receiver

PARAMETER	SYMBOL	MIN.	TYP.	MAX.	UNIT
DIFFERENTIAL INPUT THRESHOLD VOLTAGE	V_{TH}	-200	-125	-30	mV
INPUT VOLTAGE HYSTERESIS	V_{HYS}	-	15	-	mV
LINE INPUT RESISTANCE	R_{IN}	96	-	-	kΩ

2.3.6 G.703 64 kbit/s co-directional interface (E0)

The EuroProt+ device also supports line differential communication via telecom networks using G.703.1 64 kbit/s co-directional interface type through COM+0091. This type of communication is performed via 2 × 2 wire isolated galvanic type interface. The protection device is connected to a multiplexer or gateway which is responsible for protocol/speed conversion.

- Connector type: Weidmüller: Receptacle: S2L 3.50/12/90 F
  Plug: B2L 3.50/12/180 F
- Impedance: 120 Ω
- Cable length: 50 m
- Interface type: G.703.1 64 kbit/s (E0) co-directional, selectable grounding, with optional external clock input

For further information about the cable assembly of this type of interface please see our G.703 E0 cable assembly guide.

Receiver

PARAMETER	VALUE
LOSS OF SIGNAL ALARM LEVEL	± 1.5 dB difference between alarm-on and alarm-off
DYNAMIC RANGE	10 dB maximum cable loss range

Transmitter

PARAMETER	VALUE
PAIR FOR EACH DIRECTION	One symmetric pair
TEST LOAD IMPEDANCE	120 Ω resistive
NOMINAL PEAK VOLTAGE OF A "MARK" (PULSE)	1.0 V
PEAK VOLTAGE OF A "SPACE" (NO PULSE)	0 V ± 0.10 V
NOMINAL PULSE WIDTH	3.9 ms
RATIO OF THE AMPLITUDES OF POSITIVE AND NEGATIVE PULSES AT THE CENTRE OF THE PULSES INTERVAL	0.95 to 1.05
RATIO OF THE WIDTHS OF POSITIVE AND NEGATIVE PULSES AT THE NOMINAL HALF AMPLITUDE	0.95 to 1.05
MAXIMUM PEAK-TO-PEAK JITTER AT THE OUTPUT PORT	Refer to clause 2/G.823

2.3.7 PRP/HSR redundant Ethernet communication interface

The PRP/HSR redundant Ethernet communication interface supports the two new IEC 62439-3 protocols which provide seamless redundancy for Ethernet networking in substations with zero-time recovery in case of a single failure without frame loss:

- PRP – Parallel Redundancy Protocol (IEC 62439-3 Clause 4)
- HSR – High-availability Seamless Redundancy (IEC 62439-3 Clause 5)

This interface uses two MM/LC connectors for double connection to networks as these protocols are based on the duplication of the sent frames.

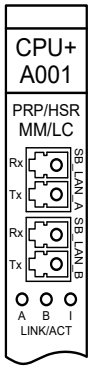

Figure 2-6 PRP/HSR connectors on a CPU+A001 module

2.3.7.1 Parallel Redundancy Protocol (PRP)

This redundancy protocol implements redundancy in the nodes as they are connected to two independent networks (LAN_A and LAN_B) sending a copy of each frame to both directions. The destination node receives and processes the first copy and discards the other copy of the sent frame.

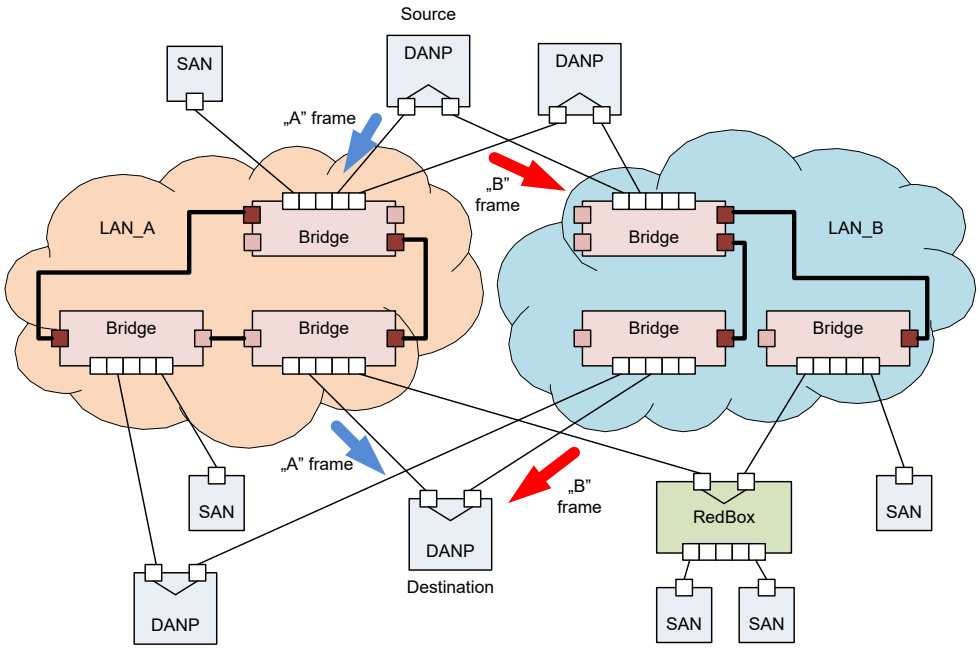

Figure 2-7 Example of a PRP redundant network

Single attached node (SAN): Network device that connects to a network with only one port.

Double attached node implementing PRP (DANP): Network device which connects to a network with two ports implementing PRP redundancy.

2.3.7.2 High-availability Seamless Redundancy (HSR)

An HSR network provides redundancy with the same safety as PRP does with a lower cost. The principle of this protocol is also based on the duplication of the sent frames but in this solution the nodes are connected to a closed ring. A source node sends two copies of a frame to both directions, and the destination node accepts the first received copy and discards the other one. If a frame returns to its source the node does not let it through itself prevent the possibility of an overload of the ring.

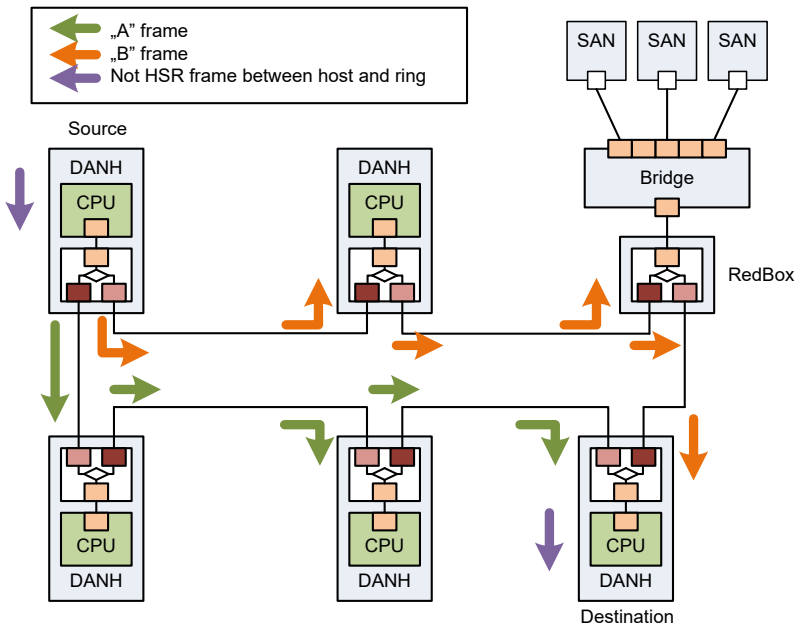

Figure 2-8 Example of an HSR redundant network

Single attached node (SAN): Network device that connects to a network with only one port.

Double attached node implementing HSR (DANH): Network device which connects to a network with two ports implementing HSR redundancy.

3 Device housing

Three +one versions are available: one is 84 HP wide with 21 module slots, the 42 HP wide, which supports 10 module slots, the double 42 HP wide with 20 module slots, and finally the 24 HP, which supports 6 module slots.

Depending on the installed modules of the configuration, the top and bottom panels of the 84 HP and 42 HP racks can be either solid (default) or perforated by 2 mm holes to prevent overheating. 24 HP housing does not have this feature, as the S24 system is less flexible, their range of the optional modules is narrower.

RACK CONFIGURATION	FREE MODULE SLOTS*	BOTTOM AND TOP PANELS	DISPLAY OPTIONS
84 HP, SINGLE RACK (3 U)	20	Solid, Perforated	3.5” TFT, 5.7” TFT
42 HP, SINGLE RACK (3 U)	9	Solid, Perforated	3.5” TFT, 5.7” TFT
42 HP, DOUBLE RACK (6 U)	19	Solid, Perforated	3.5” TFT
24 HP, PANEL INSTRUMENT CASE	5	Solid	B/W alphanumeric 3.5” TFT

**CPU module is mandatory; it uses up one fixed position.*

Previously, a new rack type was introduced to the 42HP devices. As of April 2021, this type is introduced to the 84HP devices as well. The depth of the box has been reduced from 242 mm to 223 mm. By default, this reduced-depth housing shall be used for newly manufactured devices. For more information about the previous and new size, see Chapter 22.1.

The following images showcase examples of the different types of available device housings with different kinds of front panel HMI. The available front panels are listed in Chapter 4.

84 HP single rack (3 U) with 3.5” TFT display and solid housing	
84 HP single rack (3 U) with 5.7” TFT display and perforated housing	
42 HP single rack (3 U) with 3.5” TFT display and solid housing	
42 HP double rack (6 U) with 3.5” TFT display and solid housing	
24 HP panel instrument case with B/W display (left) TFT display (right)	

Figure 3-1 Rack configuration illustrations

4 Human-Machine Interface (HMI) module

The EuroProt+ device HMI consists of the following two main parts:

- Hardware: the HMI module, which is the front panel of the device, this is described here
- Software: the embedded web server and the menu system that is accessible through the HMI module. The web server is accessible via station bus, EOB interface or RJ-45 Ethernet connector. This is described in detail in the Operating Manual (external document).

4.1 Local HMI modules

MODULE TYPE	DISPLAY	SERVICE PORT	RACK SIZE	RACK DEPTH	ILLUSTRATION
HMI+/EPP01	3,5” TFT	RJ-45	84 HP	Reduced	
HMI+/EPP02	5,7” TFT	RJ-45	84 HP	Reduced	
HMI+/EPP03	3,5” TFT	RJ-45	42 HP	Reduced	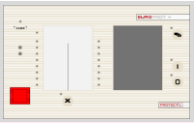
HMI+/EPP04*	5,7” TFT	RJ-45	42 HP	Reduced	
HMI+/5005	5,7” TFT	EOB	42 HP	Reduced	
HMI+/BRM01	3,5” TFT	RJ-45	84 HP	Reduced	
HMI+/BRM03	3,5” TFT	RJ-45	42 HP	Reduced	

**New display hardware requires CDSP firmware version 1560-H5 or higher!*

The following modules were made for the previous (now obsolete) racks (see Chapter 22), so they can be found in numerous devices. These became obsolete as well; **they are not recommended for new designs!**

MODULE TYPE	DISPLAY	SERVICE PORT	RACK SIZE	RACK DEPTH	ILLUSTRATION
HMI+/3501	3,5” TFT	EOB	42 HP	Normal	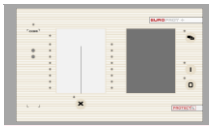
			84 HP		
HMI+/3502	3,5” TFT	RJ-45	42 HP	Normal	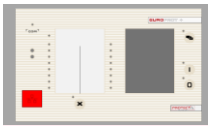
			84 HP		
HMI+/5001	5,7” TFT	EOB	42 HP	Normal	
HMI+/5002	5,7” TFT	RJ-45	42 HP	Normal	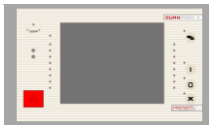
HMI+/5006	5,7” TFT	RJ-45	42 HP	Reduced	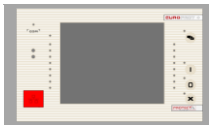
HMI+/5701	5,7” TFT	EOB	84 HP	Normal	
HMI+/5702	5,7” TFT	RJ-45	84 HP	Normal	
HMI+/3505 **HMI+/3405**	3,5” TFT	EOB	42 HP	Reduced	
			84 HP		

HMI+/3506 **HMI+/3406** **HMI+/3404**	3,5” TFT	RJ-45	42 HP	Reduced	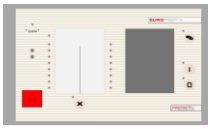
			Double 42HP		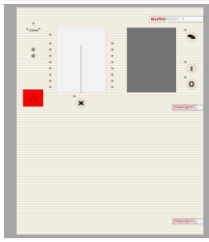
			84 HP		
HMI+/5706 **HMI+/5704**	5,7” TFT	RJ-45	84 HP	Reduced	
HMI+/5004*	5,7” TFT	RJ-45	Double 42 HP	Reduced	n/a

4.2 Remote HMI

Protecta provides an alternative solution in that case if the IED can be only mounted in a non-practical way for managing the device via the usual Human-Machine Interface.

By using a remote HMI *(terminal HMI device),* customers can place the HMI up to 3 meters far from the IED itself *(host device)* and mount the IED in any possible way that is applicable. The connection between the remote HMI and the IED is provided by a custom galvanic interface with DA-15 connector on the remote side.



Figure 4-1 42 HP Remote HMI

Depending on the size of the HMI module you can use any applicable mounting methods that are described in the *Mounting methods* chapter (Flush mounting, Semi-flush mounting, Rack mounting).



Figure 4–2 Remote HMI module with its host device

MODULE TYPE	DISPLAY	SERVICE PORT	RACK SIZE	RACK DEPTH	ILLUSTRATION
HMIT+/3505	3,5” TFT	EOB	42 HP	Reduced	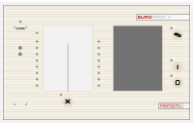
			84 HP		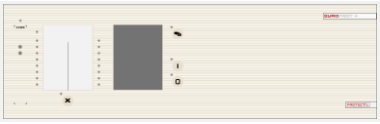
HMIT+/3506	3,5” TFT	RJ-45	42 HP	Reduced	
			84 HP		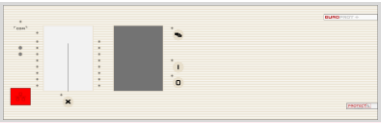
HMIT+/5706	5,7” TFT	RJ-45	84 HP	Reduced	

The following modules were made for the previous (now obsolete) racks (see Chapter 22), so they can be found in numerous devices. These became obsolete as well, **they are not recommended for new designs!**

MODULE TYPE	DISPLAY	SERVICE PORT	RACK SIZE	RACK DEPTH	ILLUSTRATION
HMIT+/3501	3,5” TFT	EOB	42 HP	Normal	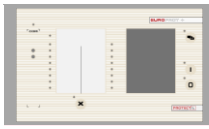
			84 HP		
HMIT+/3502	3,5” TFT	RJ-45	42 HP	Normal	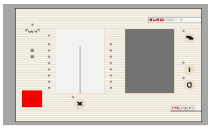
			84 HP		
HMIT+/5702	5,7” TFT	RJ-45	84 HP	Normal	

4.3 S24 HMI

The S24 Smart Line devices have a different HMI family:

MODULE TYPE	DISPLAY	SERVICE PORT	RACK SIZE	MOUNTING	ILLUSTRATION
HMI+/EPP07	3,5” TFT	RJ-45	24 HP	Flush	
HMI+/EPP08	3,5” TFT	RJ-45	24 HP	DIN-rail	
HMI+/EPP09	B&W LCD 128x64	RJ-45	24 HP	Flush	
HMI+/EPP10	B&W LCD 128x64	RJ-45	24 HP	DIN-rail	

The following module is **obsolete, it is not recommended for new designs!**

MODULE TYPE	DISPLAY	SERVICE PORT	RACK SIZE	MOUNTING	ILLUSTRATION
HMI+/2401*	3,5” TFT	EOB	24 HP	Normal	
HMI+/2604* HMI+/2404 HMI+/2304**	3,5” TFT	RJ-45	24 HP	Normal	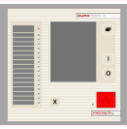
HMI+/2606* HMI+/2406 HMI+/2306**	3,5” TFT	RJ-45	24 HP	DIN-rail	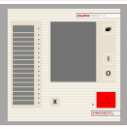
HMI+/2704* HMI+/2504	B&W LCD	RJ-45	24 HP	Normal	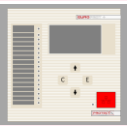
HMI+/2706* HMI+/2506	B&W LCD	RJ-45	24 HP	DIN-rail	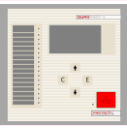

**For newer, modular-type S24 devices.*
***New display hardware requires CDSP firmware version 1560-H5 or higher!*

4.4 Parts of the HMI modules

The EuroProt+ device HMI on the front panel contains the following elements:

FUNCTION	DESCRIPTION
16 PIECES USER LEDS	Three-color, 3 mm circular LEDs
COM LED	Yellow, 3 mm circular LED indicating EOB/RJ-45 (on the front panel) communication link and activity
CAPACITIVE TOUCH KEY LEDS	4 pcs yellow, 3 mm circular LEDs indicating touch key actions
DEVICE STATUS LED	1 piece three-color, 3 mm circular LED Green: normal device operation Yellow: device is in warning state Red: device is in error state
DEVICE KEYS (I, O, X, PAGE)	Capacitive touch keys
	Tactile push buttons
BUZZER	Audible touch key pressure feedback
CHANGEABLE LED DESCRIPTION LABEL	Describes user LED functionality
DISPLAY	320 × 240 pixel TFT color display with resistive touchscreen interface (3.5” or optional 5.7”)
	128 × 64 LCD black & white display
OPTICAL INTERFACE FOR FACTORY USAGE	For debugging and software development purposes *Only for 42 HP and 84 HP devices.*
EOB CONNECTOR	**E**thernet **O**ver **B**oard: communication interface accomplishes isolated, non-galvanic Ethernet connection with the help of a magnetically attached EOB device. The EOB device has an RJ-45 type connector supporting Ethernet connection to the user computer. This is a proprietary and patented solution from Protecta Ltd. **EOB1:** Supporting 10Base-T Ethernet connection. Passive device with one RJ45 type connector. Obsolete module. **EOB2:** Supporting 10/100Base-Tx Ethernet connection. An active device that has a USB port in addition to the RJ45 connector for powering up.
ETHERNET SERVICE PORT	**IP56** rated Ethernet 10/100-Base-T interface with RJ-45 type connector (IP56 only valid if the cap of the service port is closed.)

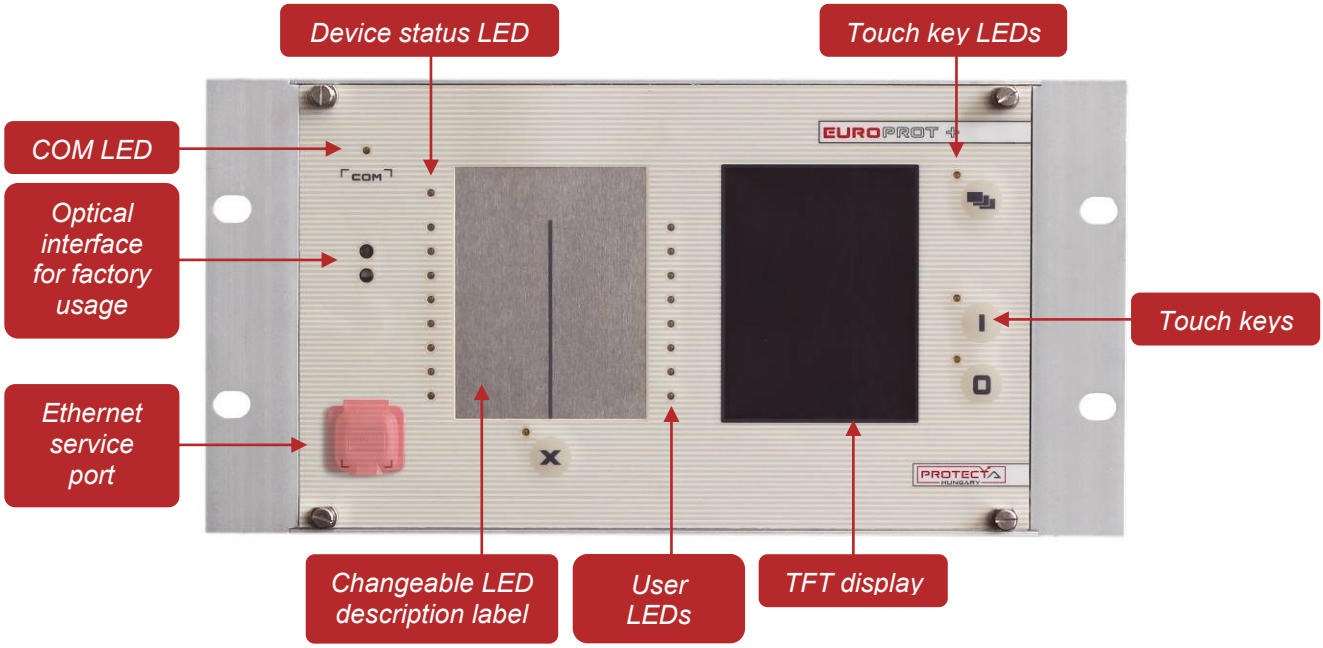

Figure 4–3 HMI signals and controls

LCD dot-defect handling policy

The definitions of dot-defect are as below:

- The defect area of the dot must be bigger than half of a dot.
- For bright dot-defect (sparkle mode), showing black pattern, the dot's brightness must be over 30 % brighter than others at black raster.
- For dark dot-defect (black mode), showing white pattern, the dot's brightness must be under 70 % darker than others at R.G.B. raster.

DOT-DEFECT TYPE		MAXIMUM NUMBER ACCEPTABLE	
		3.5"	5.7"
SPARKLE MODE	1 dot	4	4
	2 dots	2 (sets)	1
	IN TOTAL	4	5
BLACK MODE	1 dot	4	5
	2 dots	2 (sets)	2
	IN TOTAL	4	5
SPARKLE MODE AND BLACK MODE	2 dots	2 (sets)	n/a
IN TOTAL		6	10

For further information please contact our Application Team. (application@protecta.hu)

5 Current input module

This is an input module with intermediate current transformers to input the phase currents and the zero-sequence current. The rated current for the phase current and for the zero-sequence current can be selectable by parameter.

Main features:

- Rated frequency: 50 Hz, 60 Hz
- *Electronic* iron-core flux compensation

Connector types:

- *The default and optionally available connector types are indicated for each module in the tables below. See Chapter 20.2 for details about each type.*

MODULE TYPE	CT+/0101		CT+/1111*		CT+/1155		CT+/1500	
CHANNEL NUMBER	1 – 4		1 – 4		1 – 4		1 – 3	
SELECTABLE RATED CURRENT, I_N [A]	0.04	0.2	1	5	1	5	1	5
MAX. MEASURED CURRENT (± 10 %)	8 × I_N		50 × I_N		12.5 × I_N		2 × I_N	
POWER CONSUMPTION AT RATED CURRENT [VA]	0.005	0.1	0.01	0.25	0.02	0.45	0.1	1.55
THERMAL WITHSTAND [A]								
CONTINUOUSLY	7		20		20		7	
10 s	50		175		120		50	
1 s	150		500		380		150	
10 ms	330		1200		850		330	
CONNECTOR TYPE	Default: STVS Options: T, P		Default: STVS Options: -		Default: STVS Options: -		Default: STVS Options: R, T, P	
RECOMMENDED APPLICATION	DEFL earth fault protection		Special disturbance recorder application in wider frequency range		Special protection applications where the overcurrent in the secondary circuit cannot exceed 10 × I_n		General three-phase measurement	

Obsolete module. These modules are not recommended for new designs!

MODULE TYPE	CT+/1515*		CT+/2500*		CT+/5101			
CHANNEL NUMBER	1 – 4		1 – 3		1 – 3			
SELECTABLE RATED CURRENT, I_N [A]	1	5	1	5	1	5	0.2	1
MAX. MEASURED CURRENT (± 10 %)	2 × I_N		2 × I_N		50 × I_N		12.5 × I_N	
POWER CONSUMPTION AT RATED CURRENT [VA]	0.1	1.55	0.1	1.55	0.01	0.25	0.005	0.1
THERMAL WITHSTAND [A]								
CONTINUOUSLY	7		7		20		7	
10 s	50		50		175		50	
1 s	150		150		500		150	
10 ms	330		330		1200		330	
CONNECTOR TYPE	Default: STVS Options: -		Default: STVS Options: -		Default: STVS Options: -			
RECOMMENDED APPLICATION	Special disturbance recorder application		Generator protections		Extremely sensitive earth-fault applications			

Obsolete module. These modules are not recommended for new designs!

MODULE TYPE	CT+/5102				CT+/5110				CT+/5111*			
CHANNEL NUMBER	1 – 3		4		1 – 3		4		1 – 3		4	
SELECTABLE RATED CURRENT, I_N [A]	1	5	0.2	1	1	5	0.2	1	1	5	0.001	0.005
MAX. MEASURED CURRENT (± 10 %)	50 × I_N				50 × I_N				50 × I_N			
POWER CONSUMPTION AT RATED CURRENT [VA]	0.01	0.25	0.001	0.01	0.06	1.3	0.004	0.6	0.01	0.25	0.005	0.1
THERMAL WITHSTAND [A]												
CONTINUOUSLY	20		20		20		7		20		7	
10 s	175		120		175		50		175		50	
1 s	500		380		500		150		500		150	
10 ms	1200		850		1200		330		1200		330	
CONNECTOR TYPE	Default: STVS Options: -				Default: STVS Options: R				Default: STVS Options: R			
RECOMMENDED APPLICATION	Sensitive earth-fault applications				High impedance earth-fault protection				Sensitive earth-fault applications			

Obsolete module. These modules are not recommended for new designs!

MODULE TYPE	CT+5115		CT+5116		CT+/5151		CT+/5152	
CHANNEL NUMBER	1 – 4		1 – 3		1 – 4		1 – 4	
SELECTABLE RATED CURRENT, I_N [A]	1	5	1	5	1	5	1	5
MAX. MEASURED CURRENT (± 10 %)	50 × I_N		50 × I_N		50 I_N		50 I_N	
POWER CONSUMPTION AT RATED CURRENT [VA]	0.01	0.25	0.01	0.25	0.01	0.25	0.01	0.25
THERMAL WITHSTAND [A]								
CONTINUOUSLY	20		20		20		20	
10 s	175		175		175		175	
1 s	500		500		500		500	
10 ms	1200		1200		1200		1200	
CONNECTOR TYPE	Default: STVS Options: R, T, P		Default: STVS Options: R		Default: STVS Options: R, T, P		Default: STVS Options: R	
RECOMMENDED APPLICATION	• General protection application* • Three-phase measurement*		High-impedance differential protection		General protection applications		Busbar protection bay units	

**The CT+/5115 module handles both applications: it can be connected to the protection and measurement core of the primary CT as well.*

MODULE TYPE	CT+/5153					CT+/5154*				
CHANNEL NUMBER	1 – 3		4			1 – 3		4		
SELECTABLE RATED CURRENT, I_N [A]	1	5	1	0.2	0.2 sens	1	5	5	1	0.2
MAX. MEASURED CURRENT (± 10 %)	50 × I_N				10 × I_N	50 × I_N		10 × I_N		
POWER CONSUMPTION AT RATED CURRENT [VA]	0.004	0.1	0.01	0.004	0.0004	0.06	1.3	1.3	0.06	0.004
THERMAL WITHSTAND [A]										
CONTINUOUSLY	20		7			20				
10 s	175		50			175				
1 s	500		150			500				
10 ms	1200		330			1200				
CONNECTOR TYPE	Default: STVS Options: R, P, T**					Default: STVS Options: R				
RECOMMENDED APPLICATION	General protection application, extremely sensitive transient earth-fault protections					General protection application, sensitive transient earth-fault protections				

Obsolete module. These modules are not recommended for new designs!
***The connector remains the same STVS, only the handle of the module becomes narrower and will be made of aluminum.*

MODULE TYPE	CT+/5155*					CT+/5253**				
CHANNEL NUMBER	1 – 3		4			1 – 3		4		
SELECTABLE RATED CURRENT, I_N [A]	1	5	0.25	0.05	0.05 sens	5	1	0.01	0.05	0.25
MAX. MEASURED CURRENT (± 10 %)	50 × I_N				8 × I_N	50× I_N		10× I_N		
POWER CONSUMPTION AT RATED CURRENT [VA]	0.06	1.3	0.6	0.004	0.0004	0.06	1.3	0.6	0.004	0.0004
THERMAL WITHSTAND [A]										
CONTINUOUSLY	20		1			20		7		
10 s	175		5			175		50		
1 s	500		10			500		150		
10 ms	1200		25			1200		330		
CONNECTOR TYPE	Default: STVS Options: -					Default: STVS Options: -				
RECOMMENDED APPLICATION	DMD Special sensitive earth fault protection					Circuit breaker diagnostics				

Obsolete module. These modules are not recommended for new designs!
***Special module*

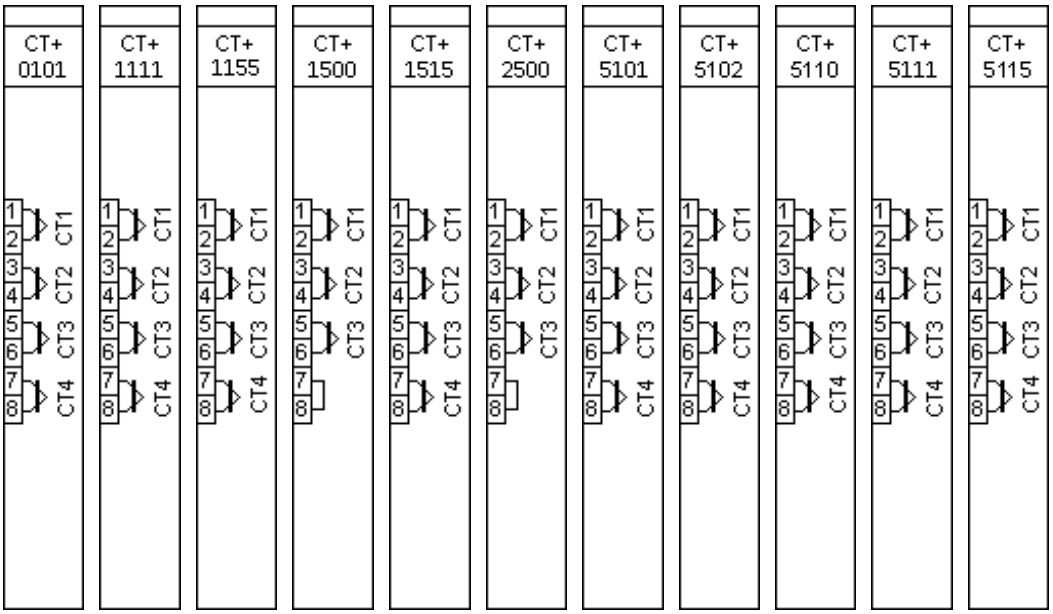

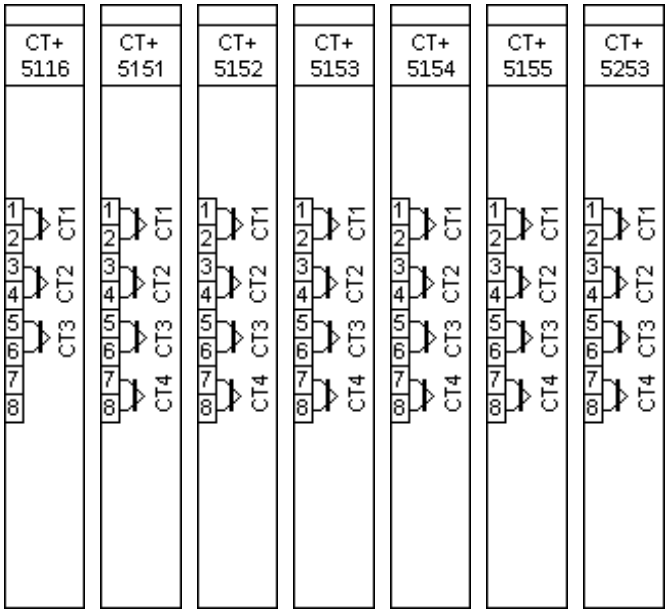

Figure 5-1 CT modules

6 Voltage input module

If the device performs voltage and/or frequency related functions and measurements (voltage protections, directional protections, frequency protections etc.), then this module is needed.

Connector types:

- *The default and optionally available connector types are indicated for each module in the tables below. See Chapter 20.2 for details about each type.*

MODULE TYPE	VT+/2211	VT+/2212*	VT+/2215**
CHANNEL NUMBER	4	4	4
SELECTABLE VOLTAGE RANGE	**Type 100:** $\frac{100}{\sqrt{3}}$, 100 V **Type 200:** $\frac{200}{\sqrt{3}}$, 200 V	**Type 100:** $\frac{100}{\sqrt{3}}$, 100 V **Type 200:** $\frac{200}{\sqrt{3}}$, 200 V	**Type 100:** $\frac{100}{\sqrt{3}}$, 100 V **Type 200:** $\frac{200}{\sqrt{3}}$, 200 V
CONTINUOUS VOLTAGE WITHSTAND	200 V	200 V	200 V
SHORT TIME OVERLOAD (1 S)	275 V (10s)	275 V	275 V
VOLTAGE MEASURING RANGE (± 10 %)	0.05 U_N – 1.3 U_N	0.05 U_N – 1.3 U_N	0.05 U_N – 1.3 U_N
POWER CONSUMPTION OF VOLTAGE INPUT	1.22 VA at 200 V 0.4 VA at 100 V	0.61 VA at 200 V 0.2 VA at 100 V	**ch. 1-3:** 0.61 VA at 200 V 0.2 VA at 100 V **ch. 4:** 50 mVA at 100 V
CONNECTOR TYPE	Default: BLA Options: T, R	Default: BLA Options: -	Default: BLA Options: -
RECOMMENDED APPLICATION	General protection applications.	Special disturbance recorder application in wider frequency range	Special protection applications with voltage transformers that require low power consumption on the 4th channel.

Obsolete module. These modules are not recommended for new designs!
***Special module*

MODULE TYPE	VT+/2231T	
CHANNEL NUMBER	8	
SELECTABLE VOLTAGE RANGE	**Type 100:** $\frac{100}{\sqrt{3}}$, 100 V **Type 200:** $\frac{200}{\sqrt{3}}$, 200 V	
CONTINUOUS VOLTAGE WITHSTAND	200 V	
SHORT TIME OVERLOAD (1 S)	275 V (10s)	
VOLTAGE MEASURING RANGE (± 10 %)	0.05 U_N – 1.3 U_N	0.00625 U_N – 0.1625 U_N
POWER CONSUMPTION OF VOLTAGE INPUT	1.22 VA at 200 V 0.4 VA at 100 V	
CONNECTOR TYPE	BLT	
RECOMMENDED APPLICATION	Special applications for Petersen-coil controller	

MODULE TYPE	VT+/2245	VT+/2246*
CHANNEL NUMBER	4	3
SELECTABLE VOLTAGE RANGE	**Type 200:** $\frac{200}{\sqrt{3}}$, 200 V **Type 400:** $\frac{400}{\sqrt{3}}$	
CONTINUOUS VOLTAGE WITHSTAND	400 V	
SHORT TIME OVERLOAD (1 S)	420 V	420 V (10 s)
VOLTAGE MEASURING RANGE (± 10 %)	0.05 U_N – 1.3 U_N	
POWER CONSUMPTION OF VOLTAGE INPUT	0.21 VA at 200 V 0.28 VA at 230 V	
CONNECTOR TYPE	Default: BLA Options: T	Default: BLA Options: -
RECOMMENDED APPLICATION	Protection applications for 400 V AC secondary voltage	Special protection applications for 400 V AC secondary voltage and increased isolation to 6 kV

**Special module*

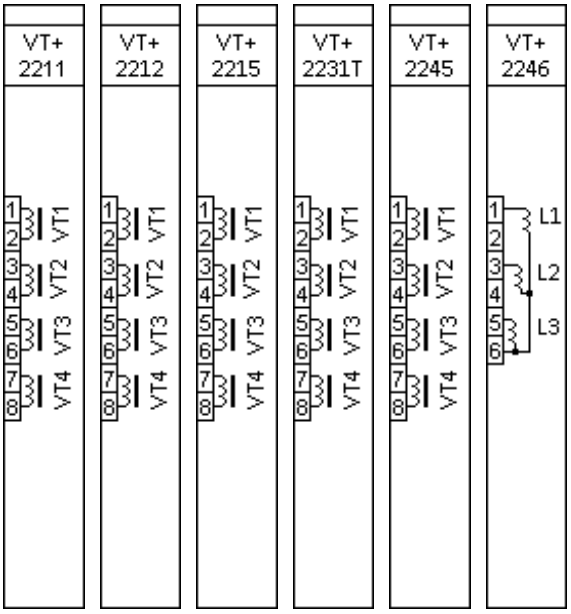

Figure 6-1 VT modules

7 Binary input module

The inputs are galvanic isolated, and the module converts high-voltage signals to the voltage level and format of the internal circuits. The inputs of this module can be also programmed to serve as a PPM input for time synchronization.

Connector types:

- *The default and optionally available connector types are indicated for each module in the tables below. See Chapter 20.2 for details about each type.*

Notes for the following tables:

- ***Withstand voltage:** continuous with 60 % of the input channels are energized.*
- ***Clamp voltage:** these are the guaranteed values; the actual ones might differ from those provided here (falling and rising around 0.66 U_N and 0.77 U_N, respectively)*
- ***Rated voltages of xxx2 modules (e.g. O8+/2102):** from firmware version 3020 and up, the rated voltage is selectable in software.*

MODULE TYPE	O8+/1101	O8+/1402	O8+/2102	O8+/2201
CHANNEL NUMBER	8	8	8	8
TIME SYNCHRONIZATION	configured by EuroCAP	configured by EuroCAP	configured by EuroCAP	configured by EuroCAP
RATED VOLTAGE	110 (125) V*	110 V / 48 V	110 (125) V* / 220 V	220 V
WITHSTAND VOLTAGE	250 V	132 V	264 V	320 V
CLAMP VOLTAGE	falling 0.64 U_N rising 0.8 U_N	falling 0.64 U_N rising 0.8 U_N	falling 0.64 U_N rising 0.8 U_N	falling 0.64 U_N rising 0.8 U_N
COMMON GROUPS	independent	independent	independent	independent
CONNECTOR TYPE	Default: BLA Options: T	BLT	BLT	Default: BLA Options: T

**The clamp voltage values refer to 110 V.*

MODULE TYPE	O8+/2401	O8+/4202	O8+/4801
CHANNEL NUMBER	8	8	8
TIME SYNCHRONIZATION	configured by EuroCAP	configured by EuroCAP	configured by EuroCAP
RATED VOLTAGE	24 V	24 V / 48 (60) V*	48 V
WITHSTAND VOLTAGE	72 V	72 V	100 V
CLAMP VOLTAGE	falling 0.64 U_N rising 0.8 U_N	falling 0.64 U_N rising 0.8 U_N	falling 0.64 U_N rising 0.8 U_N
COMMON GROUPS	independent	independent	independent
CONNECTOR TYPE	Default: BLA Options: T	BLT	Default: BLA Options: T

** The clamp voltage values refer to 24/48 V*

MODULE TYPE	O12+/1101	O12+/2201	O12+/2401	O12+/4801
CHANNEL NUMBER	12	12	12	12
TIME SYNCHRONIZATION	configured by EuroCAP	configured by EuroCAP	configured by EuroCAP	configured by EuroCAP
RATED VOLTAGE	110 (125) V*	220 V	24 V	48 V
WITHSTAND VOLTAGE	250 V	320 V	72 V	72 V
CLAMP VOLTAGE	falling 0.64 U_N rising 0.8 U_N	falling 0.64 U_N rising 0.8 U_N	falling 0.64 U_N rising 0.8 U_N	falling 0.64 U_N rising 0.8 U_N
COMMON GROUPS	4 × 3 common	4 × 3 common	4 × 3 common	4 × 3 common
CONNECTOR TYPE	Default: BLA Options: T	Default: BLA Options: T	Default: BLA Options: T	Default: BLA Options: T

**The clamp voltage values refer to 110 V*

MODULE TYPE	O12+/2101***	O12+/2102	O12+/4201***	O12+/4202
CHANNEL NUMBER	12	12	12	12
TIME SYNCHRONIZATION	configured by EuroCAP	configured by EuroCAP	configured by EuroCAP	configured by EuroCAP
RATED VOLTAGE	110 (125) V/ 220 V user selectable on channel basis by jumpers*	110 (125) V* / 220 V	24 V / 48 V user selectable on channel basis by jumpers	24 V / 48 (60) V**
WITHSTAND VOLTAGE	320 V	264 V	72 V	72 V
CLAMP VOLTAGE	falling 0.64 U_N rising 0.8 U_N	falling 0.64 U_N rising 0.8 U_N	falling 0.64 U_N rising 0.8 U_N	falling 0.64 U_N rising 0.8 U_N
COMMON GROUPS	4 × 3 common	4 × 3 common	4 × 3 common	4 × 3 common
CONNECTOR TYPE	Default: BLA Options: T	BLT	Default: BLA Options: -	BLT

**The clamp voltage values refer to 110 V.*
*** The clamp voltage values refer to 24/48 V.*
**** O12+2101 and O12+4201 modules can be used only in demonstration applications! For further information see our Product availability chapter.*

MODULE TYPE	O15+/1101T	O15+/2102	O15+/2201T	O15+/2401T
CHANNEL NUMBER	15	15	15	15
TIME SYNCHRONIZATION	configured by EuroCAP	configured by EuroCAP	configured by EuroCAP	configured by EuroCAP
RATED VOLTAGE	110 (125) V*	110 (125) V* / 220 V	220 V	24 V
WITHSTAND VOLTAGE	250 V	264 V	250 V	100 V
CLAMP VOLTAGE	falling 0.64 U_N rising 0.8 U_N	falling 0.64 U_N rising 0.8 U_N	falling 0.64 U_N rising 0.8 U_N	falling 0.64 U_N rising 0.8 U_N
COMMON GROUPS	1 × 15 common	1 × 15 common	1 × 15 common	1 × 15 common
CONNECTOR TYPE	BLT	BLT	BLT	BLT

**The clamp voltage values refer to 110 V.*

MODULE TYPE	O15+/4202	O15+/4801T
CHANNEL NUMBER	15	15
TIME SYNCHRONIZATION	configured by EuroCAP	configured by EuroCAP
RATED VOLTAGE	24 V DC / 48 (60) V DC*	48 V
WITHSTAND VOLTAGE	72 V	100 V
CLAMP VOLTAGE	falling 0.64 U_N rising 0.8 U_N	falling 0.64 U_N rising 0.8 U_N
COMMON GROUPS	1 × 15 common	1 × 15 common
CONNECTOR TYPE	BLT	BLT

**The clamp voltage values refer to 24/48 V.*

MODULE TYPE	O16+/1101*	O16+/2201*	O16+/2401*	O16+/4801*
CHANNEL NUMBER	16	16	16	16
TIME SYNCHRONIZATION	-	-	-	-
RATED VOLTAGE	110 (125) V**	220 V	24 V	48 V
WITHSTAND VOLTAGE	250 V	320 V	72 V	100 V
CLAMP VOLTAGE	falling 0.64 U_N rising 0.8 U_N	falling 0.64 U_N rising 0.8 U_N	falling 0.64 U_N rising 0.8 U_N	falling 0.64 U_N rising 0.8 U_N
COMMON GROUPS	2 × 8 common	2 × 8 common	2 × 8 common	2 × 8 common
CONNECTOR TYPE	Default: BL 3.5 Options: -	Default: BL 3.5 Options: -	Default: BL 3.5 Options: -	Default: BL 3.5 Options: -

Obsolete module. These modules are not recommended for new designs! O15+ modules are recommended instead (see above).
***The clamp voltage values refer to 110 V.*

Though the states of the inputs are refreshed with 2 kHz frequency, there is a 1 ms built-in analog filtering in them. Additional digital filtering is set in the EuroCAP tool (default: 4 ms).

Main features:

- Digitally filtered per channel
- Current drain:
  - max. 1.6 mA per channel at 220 V DC
  - max. 1.8 mA per channel at 110 V DC
  - max. 2 mA per channel at 48 V DC
  - max. 3 mA per channel at 24 V DC
- In such applications where the input voltage is 60 V the modules with 48 V rated voltage can be used.
- Input voltage type can be either DC or AC voltage. If AC voltage is used make sure that the type and the parameters of the binary inputs are configured properly in EuroCAP tool.

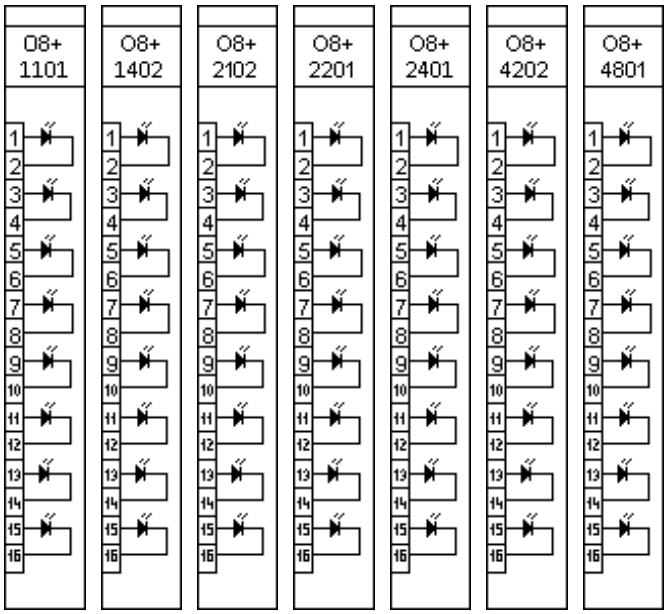

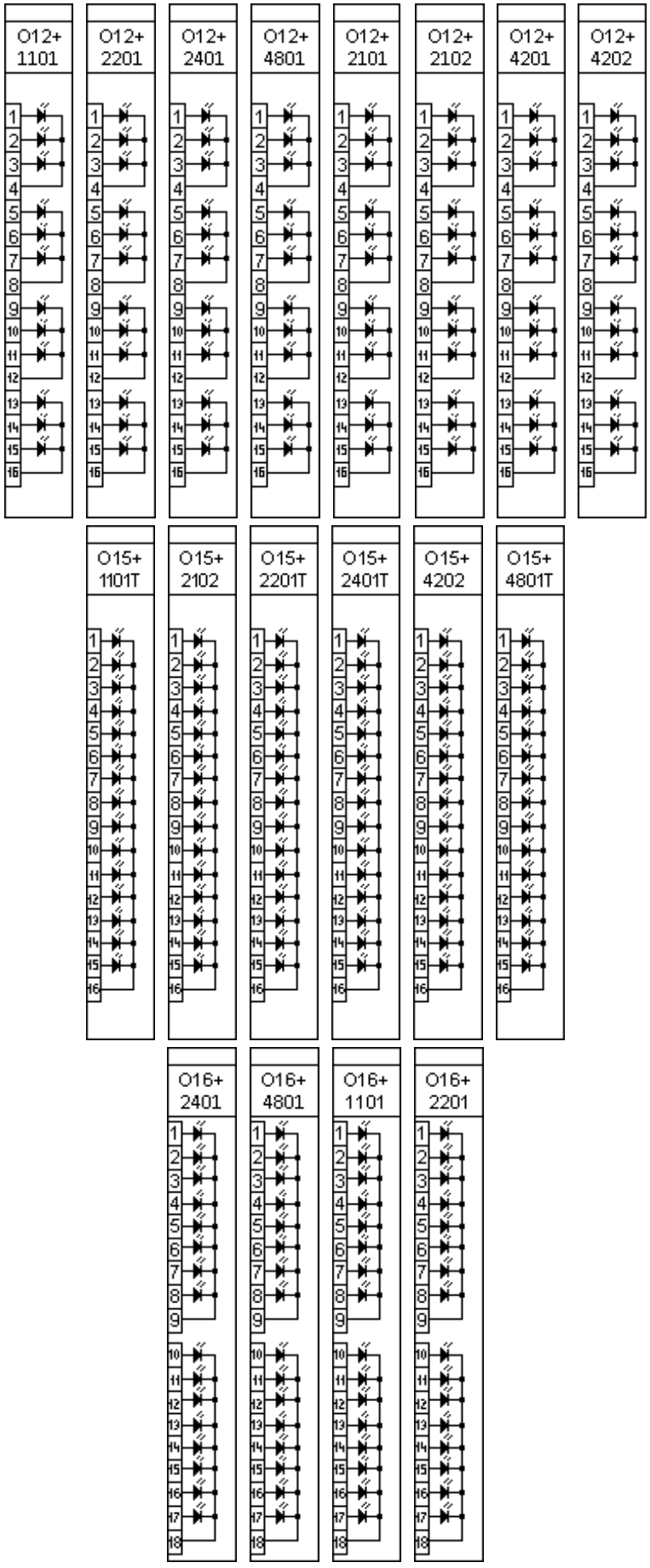

Figure 7-1 Binary input modules

8 Signaling module

The signaling module has 4, 8, 12 or 16 relay outputs with dry contacts.

Connector types:

- *The default and optionally available connector types are indicated for each module in the tables below. See Chapter 20.2 for details about each type.*

MODULE TYPE	R4+/01	R6+/0012	R8+/00	R8+/01*
RATED VOLTAGE	400 V AC 250 V DC	400 V AC 250 V DC	400 V AC 250 V DC	250 V AC/DC
CONTINUOUS CARRY	8 A	8 A	8 A	8 A
CONTACT VERSIONS	4 CO	CH5 and CH6 NO others CO	8 NO	CH1 NC others NO
GROUP ISOLATION	4 independent	6	8 independent	8 independent
CONNECTOR TYPE	Default: BLA Options: T	BLT	Default: BLA Options: T	Default: BLA Options: -

Obsolete module. These modules are not recommended for new designs!

MODULE TYPE	R8+/80	R8+/0002	R8+/0C02	R8+/C0
RATED VOLTAGE	400 V AC 250 V DC	400 V AC 250 V DC	400 V AC 250 V DC	400 V AC 250 V DC
CONTINUOUS CARRY	8 A	8 A	8 A	8 A
CONTACT VERSIONS	CH8 NC others NO	8 NO	CH7 and CH8 NC others NO	CH7 and CH8 NC others NO
GROUP ISOLATION	8 independent	8 independent	8 independent	8 independent
CONNECTOR TYPE	Default: BLA Options: T	BLT	BLT	Default: BLA Options: T

MODULE TYPE	R8+/FF	R12+/0000	R12+/0002	R12+/4000
RATED VOLTAGE	400 V AC 250 V DC	400 V AC 250 V DC	400 V AC 250 V DC	400 V AC 250 V DC
CONTINUOUS CARRY	8 A	8 A	8 A	8 A
CONTACT VERSIONS	8 NC	12 NO	12 NO	CH12 NC others NO
GROUP ISOLATION	8 independent	4 × 3 common	4 × 3 common	4 × 3 common
CONNECTOR TYPE	Default: BLA Options: T	Default: BLA Options: T	BLT	Default: BLA Options: T

MODULE TYPE	R12+/4400	R12+/8002	R15+/0002	R16+/0000*
RATED VOLTAGE	400 V AC 250 V DC	400 V AC 250 V DC	400 V AC 250 V DC	250 V AC/DC
CONTINUOUS CARRY	8 A	8 A	8 A	8 A
CONTACT VERSIONS	CH9 and CH12 NC others NO	CH12 NC others NO	15 NO	16 NO
GROUP ISOLATION	4 × 3 common	4 × 3 common	15 common	2 × 8 common
CONNECTOR TYPE	Default: BLA Options: T	BLT	BLT	Default: BL 3.5 Options: -

Obsolete module. These modules are not recommended for new designs!

MODULE TYPE	R16+/8000*	R16+/8080*	R4S+/01**	R4S+/16**
RATED VOLTAGE	250 V AC/DC	250 V AC/DC	400 V AC 250 V DC	400 V AC 250 V DC
CONTINUOUS CARRY	8 A	8 A	8 A 120 mA***	120 mA
CONTACT VERSIONS	CH16 NC others NO	CH16 and CH8 NC others NO	4 CO (1 SSR, 3 normal)	4 CO (4 SSR)
GROUP ISOLATION	2 × 8 common	2 × 8 common	4 independent	4 independent
CONNECTOR TYPE	Default: BL 3.5 Options: -	Default: BL 3.5 Options: -	Default: BLA Options: T	Default: BLA Options: -

Obsolete module. These modules are not recommended for new designs!
Modules with **solid-state relays (SSR)
****If the signaling is performed via the solid-state relay the continuous carry value is 120 mA.*

MODULE TYPE	R6S+/0012	R1T+/0001*
RATED VOLTAGE	400 V AC 250 V DC	400 V AC 250 V DC
CONTINUOUS CARRY	8 A	32 A
CONTACT VERSIONS	4 CO + 2 SSR	1 NO
GROUP ISOLATION	6 independent	1 independent
CONNECTOR TYPE	BLT	STVS

***Thyristor module.** Can be used only unipolarly. For further information see our Product availability chapter.*

Main features (according to IEC 60255-1):

- Maximum switching voltage: 400 V AC
- Breaking capacity:
  - Resistive: @ 220 V DC: 0.2A, @ 125 V DC: 0.3A, @110 V DC: 0.4A
  - (L/R=40 ms) @ 220 V DC: 0.1A, @ 125 V DC: 0.21A, @110 V DC: 0.24A
  - (L/R=50 ms) @ 220 V DC: 0.1A, @ 125 V DC: 0.2A, @110 V DC: 0.22A
- Breaking capacity max.: 2000 VA
- Short time carrying capacity: 1s, 35A; 20 ms, 65 A
- Limiting making current, max. 4 s: 15 A (df = 10 %)
- Dielectric strength between open contacts, 1 min: 1000 V_{RMS}
- Mechanical endurance: 100 × 10^3 cycles, (8A, 250VAC, cosφ=1, 85°C)
- Circuit closing capability: maximally, 10 ms, with SSR 0.5 ms.
- Bounce time: maximally 5 ms, with SSR 0.5 ms.
- *The signaling is also performed via a solid-state relay (SSR) channel on R4S+01, R4S+16 and R6S+0012 module*

Notes for *Continuous carry* data:

The given current value applies to one relay group which limits the maximum carry if more than one relay is active in one group:

- R4+, R6+ or R8+ modules (independent relays): all contacts can carry 8A
- R12+ modules (4 groups of 3): 2.66A per contact if all 3 are active in a group
- R15+ modules (1 group of 15): 0.533A per contact if all 15 are active

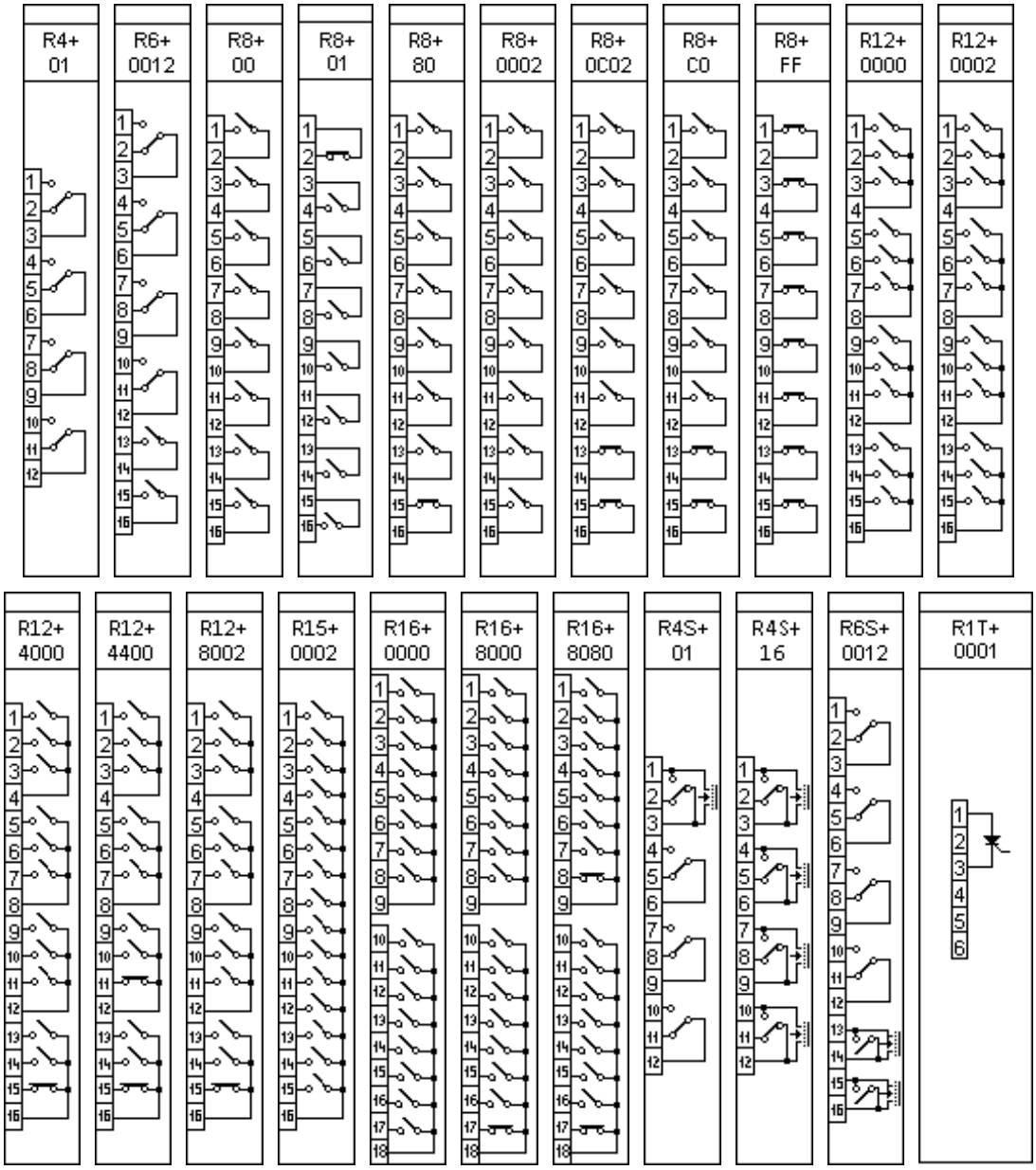

Figure 8-1 Signaling modules

9 Tripping module

The tripping module is a proprietary and patented solution that facilitates direct control of a circuit breaker.

Connector types:

- *The default and optionally available connector types are indicated for each module in the table below. See Chapter 20.2 for details about each type.*

MODULE TYPE	TRIP+/4201	TRIP+/4202	TRIP+1101*	TRIP+/2101
CHANNEL NUMBER	4	4	4	4
RATED VOLTAGE	24 V DC and 48 V DC	24 V DC and 48/60 V DC	110 (125) V DC	110 (125) V DC
WITHSTAND VOLTAGE	72 V DC	72 V DC	242 V DC	150 V DC
CONTINUOUS CARRY	8 A	8 A	8 A	8 A
MAKING CAPACITY	0.5 s, 30 A	0.5 s, 30 A	0.5 s, 30 A	0.5 s, 30 A
BREAKING CAPACITY	L/R = 40 ms: 4 A DC	L/R = 40 ms: 4 A DC	L/R = 40 ms: 4 A DC	L/R = 40 ms: 4 A DC
CONNECTOR TYPE	Default: BLA Options: T	BLT	Default: BLA Options: -	Default: BLA Options: T

Obsolete module. These modules are not recommended for new designs!

MODULE TYPE	TRIP+/2102	TRIP+/21F1*	TRIP+/2201	TRIP+/2201/C
CHANNEL NUMBER	4	4	4	4
RATED VOLTAGE	110 (125) V DC / 220 V DC	110 V DC / 220 V DC	220 V DC	220 V
WITHSTAND VOLTAGE	264 V DC	242 V DC	242 V DC	242 V DC
CONTINUOUS CARRY	10 A	8 A	8 A	8 A
MAKING CAPACITY	0.5 s, 30 A	0.5 s, 30 A	0.5 s, 30 A	0.5 s, 30 A
BREAKING CAPACITY	L/R = 40 ms: 4 A DC	L/R = 40 ms: 4 A DC	L/R = 40 ms: 4 A DC	L/R = 40 ms: 4 A DC
CONNECTOR TYPE	BLT	Default: BLA Options: T	Default: BLA Options: T	Default: BLA Options: -

**Without trip circuit supervision.*

Main features:

- High-speed operation: with pre-trip 0.5 ms, without pre-trip typically 10 ms, maximally 22 ms.
- Trip circuit supervision for each trip contact, except TRIP+21F1
- With 2-wire wiring, the tripping output can be *dry* contact type, too
- Short time overload (TRIP+/2102 only): 1s 60A
- Trip circuit supervision is switchable in case of TRIP+/xxx2 modules

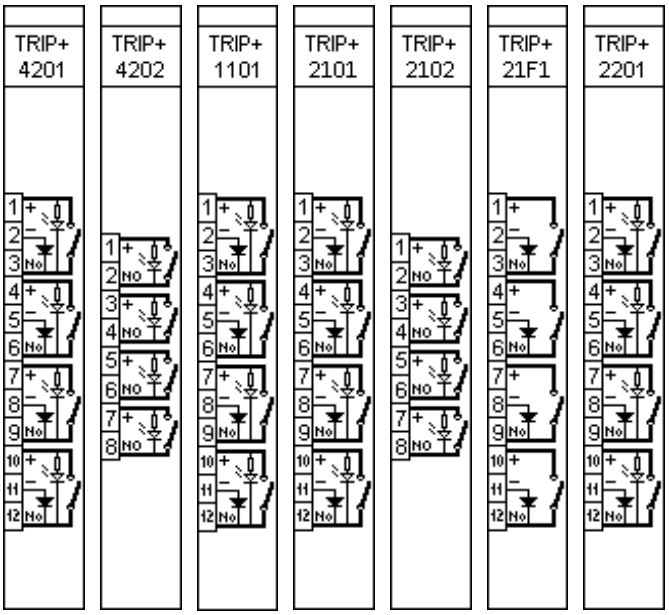

Figure 9-1 Tripping modules

9.1 TRIP+ module wiring

The tripping module provides tripping circuit supervision function (TCS). The wiring of these modules can be 2-wire or 3-wire. (TCS function is active for all wiring methods.)

The voltage of the "No" contact is maximized at 15 V by a Zener-diode. Make sure that the voltage caused by the resistance of the circuit breaker and the injected current from the TRIP+ module does not reach 10 V.

Our TRIP+ modules are improved to switch DC circuits. **Using reversed polarity or AC voltage can damage internal circuits. Improper wiring might cause improper operation!**

9.1.1 3-wire TRIP+ wiring methods

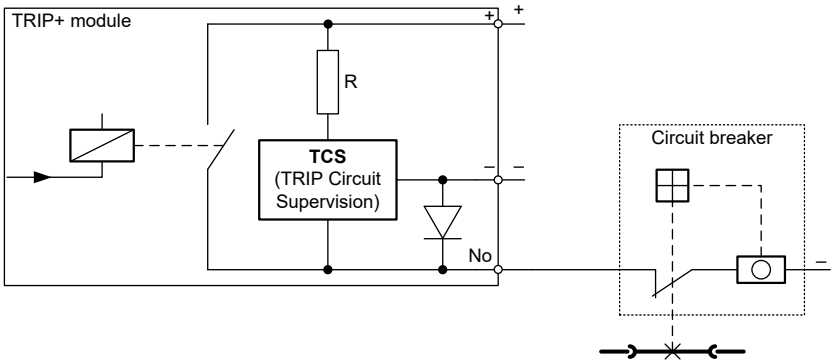

Figure 9-2 3-wire TRIP+ wiring

It is possible to use parallel connected TRIP+ modules. In this case the negative terminals must be common.

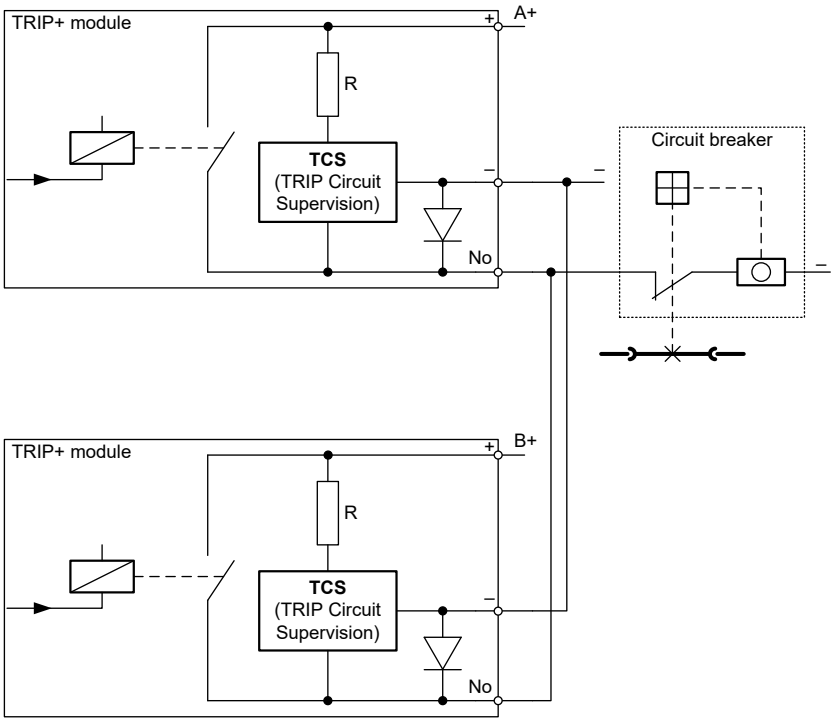

Figure 9-3 3-wire TRIP+ wiring using parallel connected TRIP+ modules

9.1.2 2-wire TRIP+ wiring methods

If necessary, the TRIP+ modules can be wired using only the “+” and the “No” contacts.

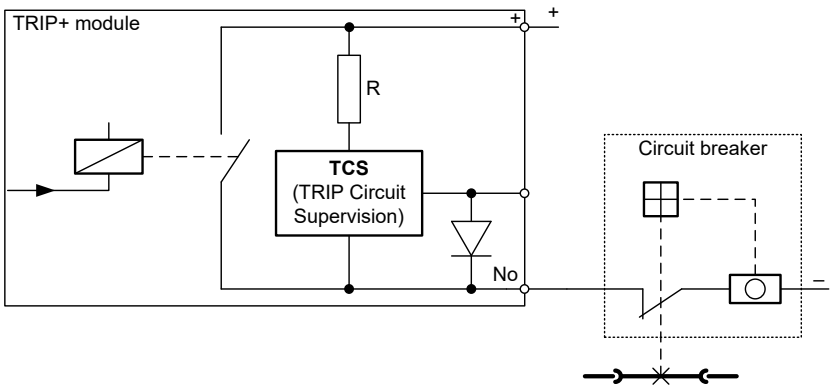

Figure 9-4 2-wire TRIP+ wiring

It is possible to use parallel connected TRIP+ modules.

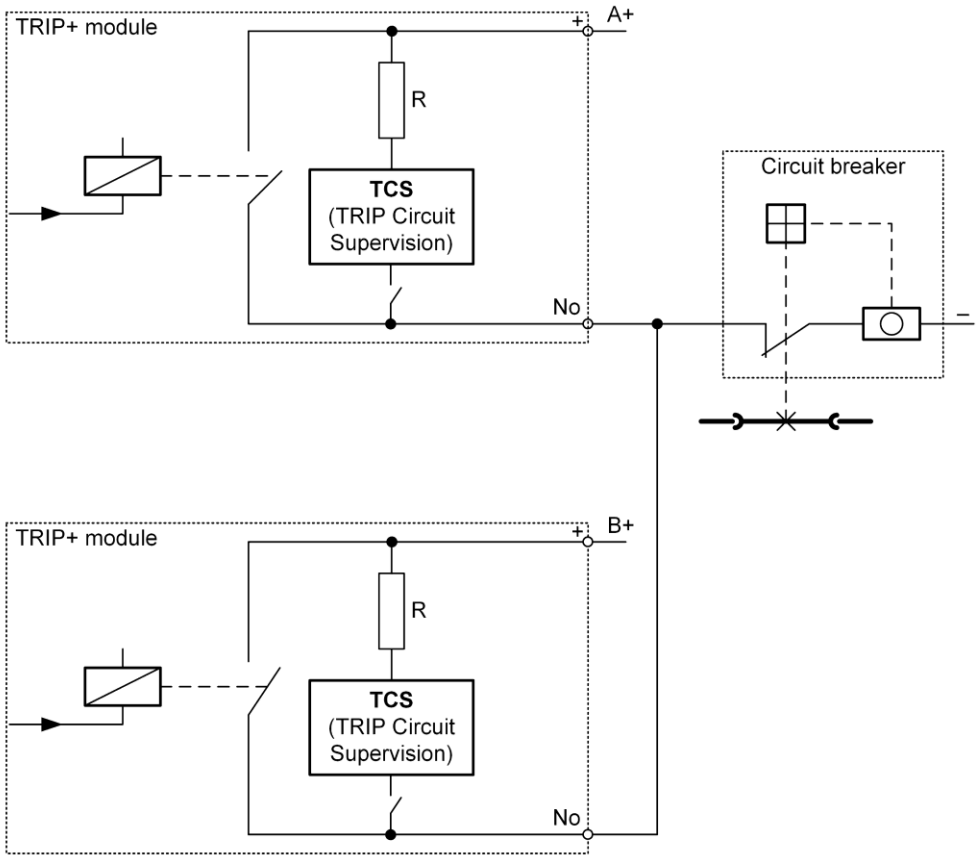

Figure 9-5 2-wire TRIP+ wiring using parallel connected TRIP+ modules

If the circuit breaker needs two-pole switching, TRIP+ modules can be connected in series as you can see in Figure 9-6.

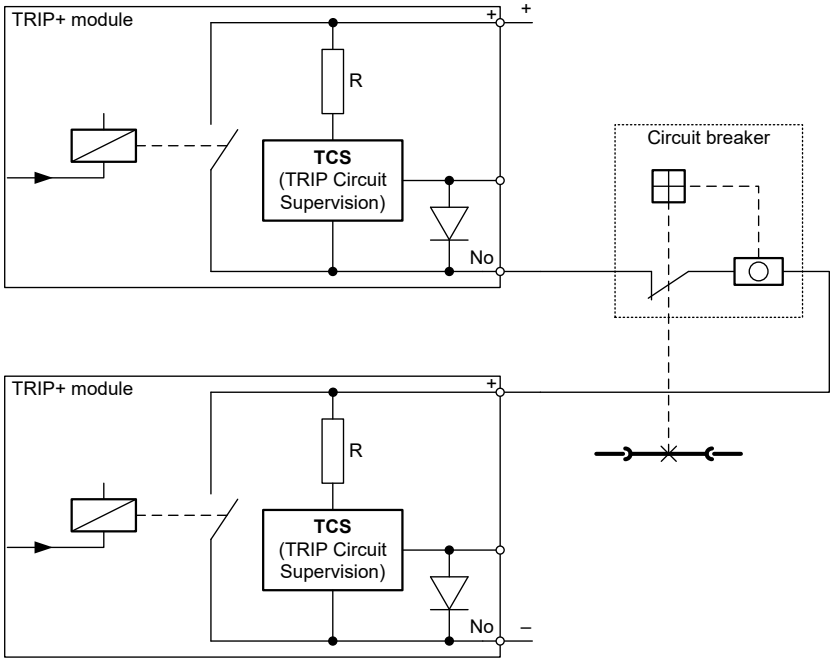

Figure 9-6 2-wire TRIP+ wiring using series connected TRIP+ modules

9.2 Trip Circuit Supervision (TCS)

Apart from the TRIP+/21F1, all TRIP modules have TCS. The feature is described in detail (tech. data, instructions, etc.) in a separate document:

https://www.protecta.hu/downloads/tcs_en

The technical data of the TCS is shown here as well:

	MODULE TYPE	TRIP+/4201	TRIP+/2101	TRIP+/2201
	VALUE OF R RESISTOR (± 10 %)	10 kΩ	73 kΩ	130 kΩ
	INJECTED CURRENT AT "NO" CONTACT	2.4 mA @ 24 V DC 4.8 mA @ 48 V DC	1.5 mA @ 110 V DC	1.7 mA @ 220 V DC
MAXIMUM RESISTANCE OF THE TRIP COIL	3-WIRE WIRING (MAX. 10 V)	**11.8 kΩ** @ 24 V DC **3.7 kΩ** @ 48 V DC	**9.7 kΩ** @ 110 V DC **8.4 kΩ** @ 125 V DC	**8.1 kΩ** @ 220 V DC
	3-WIRE WIRING WITH IN PARALLEL (MAX. 10 V)	**5.9 kΩ** @ 24 V DC **1.8 kΩ** @ 48 V DC	**4.8 kΩ** @ 110 V DC **4.2 kΩ** @ 125 V DC	**4 kΩ** @ 220 V DC
	2-WIRE METHOD (1 mA MIN. CURRENT)	**14 kΩ** @ 24 V DC **38 kΩ** @ 48 V DC	**37 kΩ** @ 110 V DC **52 kΩ** @ 125 V DC	**90 kΩ** @ 220 V DC

	MODULE TYPE	TRIP+/4202	TRIP+/2102
MAXIMUM RESISTANCE OF THE TRIP COIL	2-WIRE METHOD (1 mA MIN. CURRENT)	**14 kΩ** @ 24 V DC **38 kΩ** @ 48 V DC	**37 kΩ** @ 110 V DC **52 kΩ** @ 125 V DC

10 RTD input module

The RTD+1100 module is used to measure the temperature through the variation of resistance of temperature detectors. RTD+0200 and RTD+1200 are special modules for Petersen coil controllers (DRL) measuring the resistance of the potentiometer.

Connector types:

- *The default and optionally available connector types are indicated for each module in the table below. See Chapter 20.2 for details about each type.*

MODULE TYPE	RTD+/0200*	RTD+/1100	RTD+/1200*
CHANNEL NUMBER	1	4	1
MEASUREMENT METHOD	3 wire configuration	2, 3 or 4 wire configuration	3 wire configuration
ACCURACY	± 0.5 % ± 1 digit	± 0.5 % ± 1 digit	± 0.5 % ± 1 digit
SENSOR TYPE	Service-Ohm	Pt100/Ni100 Ni120/Ni120US Pt250/Ni250 Pt1000/Ni1000 Cu10 Service-Ohm (60 Ω … 1.6 kΩ)	Service-Ohm
MEASUREMENT RANGES	2 Ω … 200 Ω	- 50 °C – +150 °C	10 Ω … 1000 Ω
CONNECTOR TYPE	Default: BLA Options: T	Default: BLA Options: T	Default: BLA Options: T
RECOMMENDED APPLICATION	Arc suppression coil controller	General resistance-based temperature measurement	Arc suppression coil controller

**Special module*

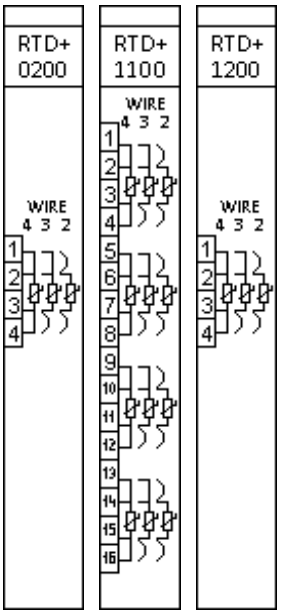

Figure 10-1 RTD input modules

10.1 RTD module wiring

If 2-wire wiring is used, you have to make sure that the value of RA and RD resistors are set correctly in the “parameters” menu of the web server.

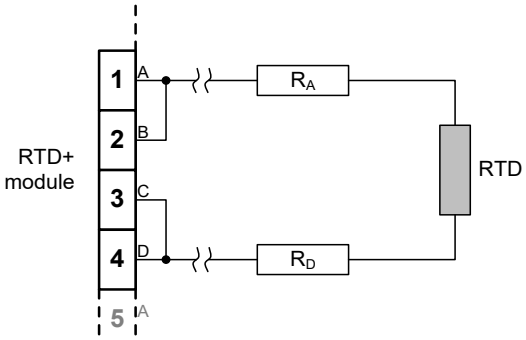

Figure 10-2 2-wire RTD wiring

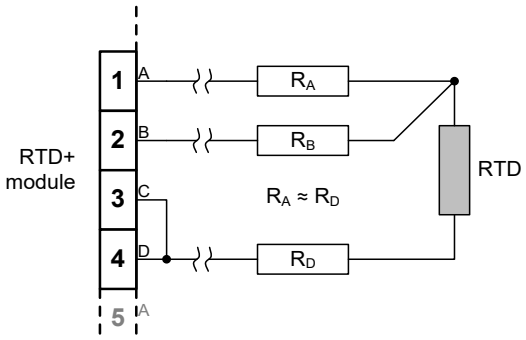

Figure 10-3 3-wire RTD wiring

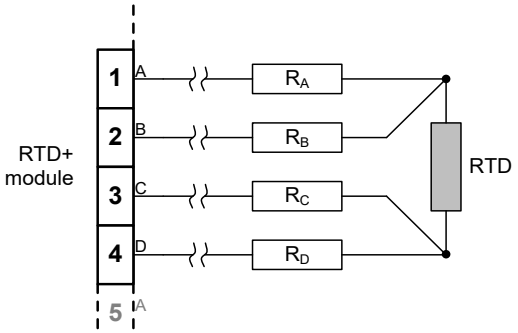

Figure 10-4 4-wire RTD wiring

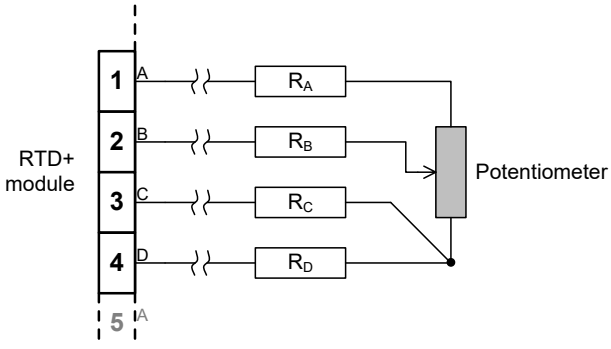

Figure 10-5 4-wire RTD wiring of potentiometer

11 Analog input module (AI)

The analog input module accepts transducers' current outputs. The AIC module can measure unipolar and bipolar current values in wide ranges.

Connector types:

- *The default and optionally available connector types are indicated for each module in the table below. See Chapter 20.2 for details about each type.*

MODULE TYPE	AIC+/0200*	AIC+/0201*	AIC+/0202
CHANNEL NUMBER	4	4	4
MEASUREMENT METHOD	2 wire inputs	2 wire inputs with optional 12 V DC power supply	2 wire inputs
RELATIVE ACCURACY	± 0.5 % ± 1 digit	± 0.5 % ± 1 digit	± 0.5 % ± 1 digit
MEASUREMENT RANGES	**± 20 mA** (typical 0-20, 4-20 mA) R_{LOAD} = 56 Ω	**± 20 mA** (typical 0-20, 4-20 mA) R_{LOAD} = 56 Ω	**± 20 mA** (typical 0-20, 4-20 mA) R_{LOAD} = 56 Ω
CONNECTOR TYPE	Default: BLA Options: -	Default: BLA Options: -	Default: BLA Options: T

Obsolete module. These modules are not recommended for new designs!

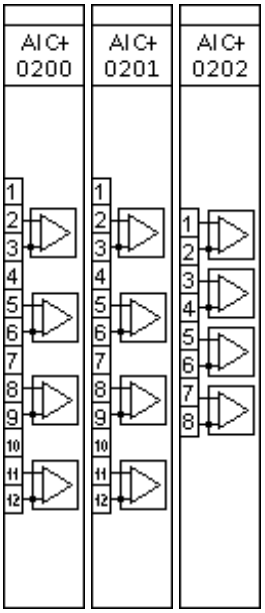

Figure 11-1 Analog input modules

11.1 AI module wiring

The following wiring method can be applied.

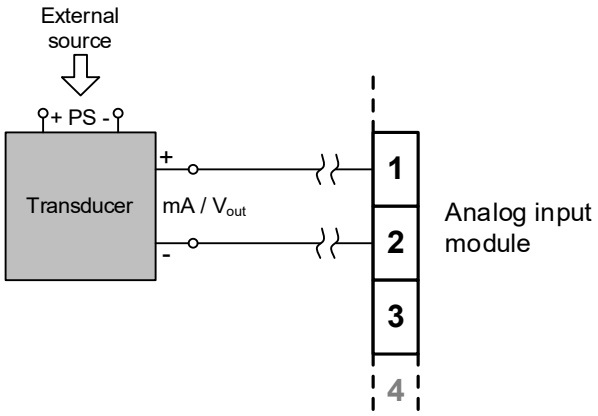

Figure 11-2 AI wiring

12 Analog output module (ATO)

The analog output module transmits current or voltage signals. The ATO module can be used in wide ranges in unipolar and bipolar mode.

Connector types:

- *The default and optionally available connector types are indicated for each module in the table below. See Chapter 20.2 for details about each type.*

MODULE TYPE	ATO+/0002	ATO+/0004
CHANNEL NUMBER	2	4
OUTPUT MODE	2 wire output	2 wire output
MAXIMUM LOAD (R_{CABLE} + $R_{RECEIVER}$)	500 Ω	500 Ω
OUTPUT RANGES	± 20 mA 0 - 20 mA 4 - 20 mA	± 20 mA 0 - 20 mA 4 - 20 mA
CONNECTOR TYPE	Default: BLA Options: T	Default: BLA Options: T

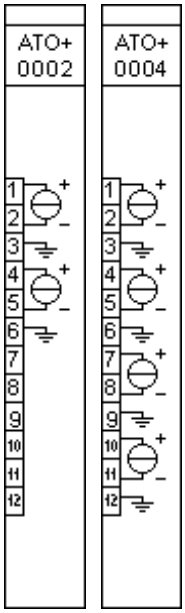

Figure 12-1 Analog output modules

12.1 ATO module wiring

The analog output module should be connected according to the following wiring diagram.

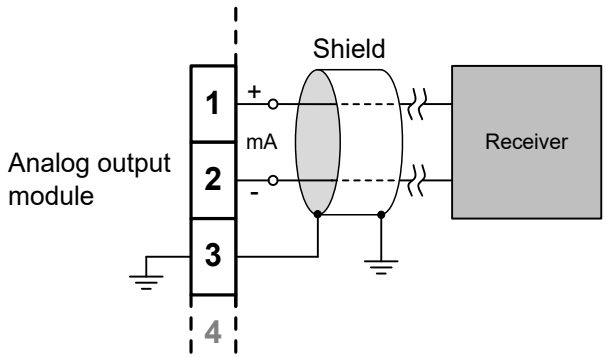

Figure 12-2 Analog output module wiring diagram

13 Sensor input module

The sensor modules receive low-level signals of current and voltage sensors (low-power instrument transformers).

Connector types:

- *The default and optionally available connector types are indicated for each module in the table below. See Chapter 20.2 for details about each type.*

MODULE TYPE	CVS+/0001		CVSR+/0001		VS+/0031***
CHANNEL NUMBER	4 U	4 I	4 U	4 I	4 U
NOMINAL VALUES	3.25 V	0.225 V*	1.27 V	0.150 V**	3.25 V
CONTINUOUS VOLTAGE WITHSTAND	35 V DC		35 V DC		35 V DC
SHORT TIME OVERLOAD (1 S)	40 V AC / 56 V DC		40 V AC / 56 V DC		40 V AC / 56 V DC
MAX. MEASURED VALUE (± 10 %)	1.8 U_N	50 I_N	2.1 U_N	50 I_N	1.6 U_N
ACCURACY	≤ 0.5 % (0.1 U_N – 1.2 U_N)		≤ 0.5 % (0.1 U_N – 1.2 U_N)		≤ 0.5 % (0.1 U_N – 1.2 U_N)
FREQUENCY RANGE	DC – 1 kHz		DC – 1 kHz		DC – 1 kHz
INPUT RESISTANCE	200 kΩ ± 1%	21 kΩ ± 1%	10 MΩ ± 1%	1.1 MΩ ± 1%	200 kΩ ± 1%
INPUT CAPACITANCE	300 pF (1 kHz)	300 pF (1 kHz)	300 pF (1 kHz)	300 pF (1 kHz)	300 pF (1 kHz)
CONNECTOR TYPE	RJ45 – 8 pole, shielded connector, isolated shielding Options: T		RJ45 – 8 pole, shielded connector, grounded shielding Options: T		M8 3-pin connector Receptacle: Hirschmann ELST 3308 RV FM 8 05 Plug: Binder 768 99-3360-00-03

**Voltage proportional to current*
***Voltage proportional to current change (Rogowski coil)*
******Obsolete module. These modules are not recommended for new designs!***

For more information about more available nominal values please contact our Application Team. (application@protecta.hu)

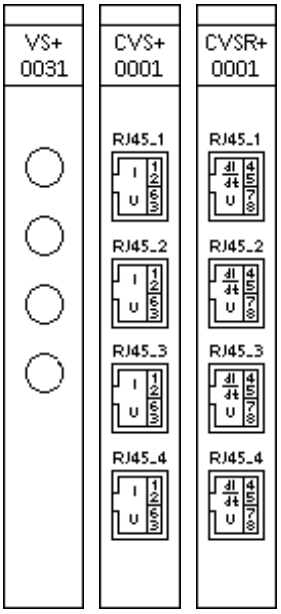

Figure 13-1 Voltage sensor modules

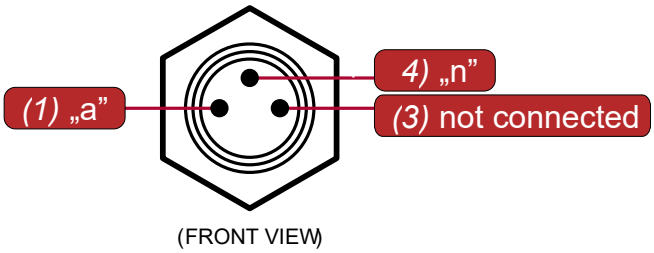

Figure 13-2 M8 connector pinout

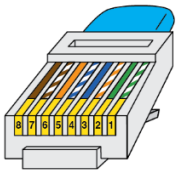

1.: S1
2.: S2
3.: “a”
6.: “n”

Figure 13-3 CVS module connector pinout

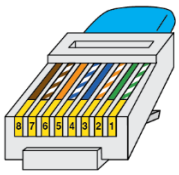

4.: S1
5.: S2
8.: “n”
7.: “a”

Figure 13-4 CVSR module connector pinout

14 Modules for current injection

14.1 Complex injector modules

Complex module for controlling the Petersen coil, which contains an injector function for the measurements, an enabling and a blocking input, and a fault relay indicating if there is any fault in the injection circuit.

Connector types:

- *The default and optionally available connector types are indicated for each module in the table below. See Chapter 20.2 for details about each type.*

MODULE TYPE	INJ+/0005	INJ+/0015*	INJ+/0025
INJECTED CURRENT	2 A	4 A	2 A
ENABLING INPUT CLAMP VOLTAGE	85 V AC	Not available function	18 V AC
BLOCKING INPUT CLAMP VOLTAGE	200 V AC	200 V AC	200 V AC
ADDITIONAL RESISTANCE FOR VOLTAGE INPUT	Not available function	265 kΩ ± 1%	Not available function
CONNECTOR TYPE	Default: STVS6, BLA10 Options: T	Default: STVS6, BLA10 Options: -	Default: STVS6, BLA10 Options: T
RECOMMENDED APPLICATION	Arc suppression coil controller	Network compensation level measurement on resonant grounded networks	Arc suppression coil controller

**Special module*

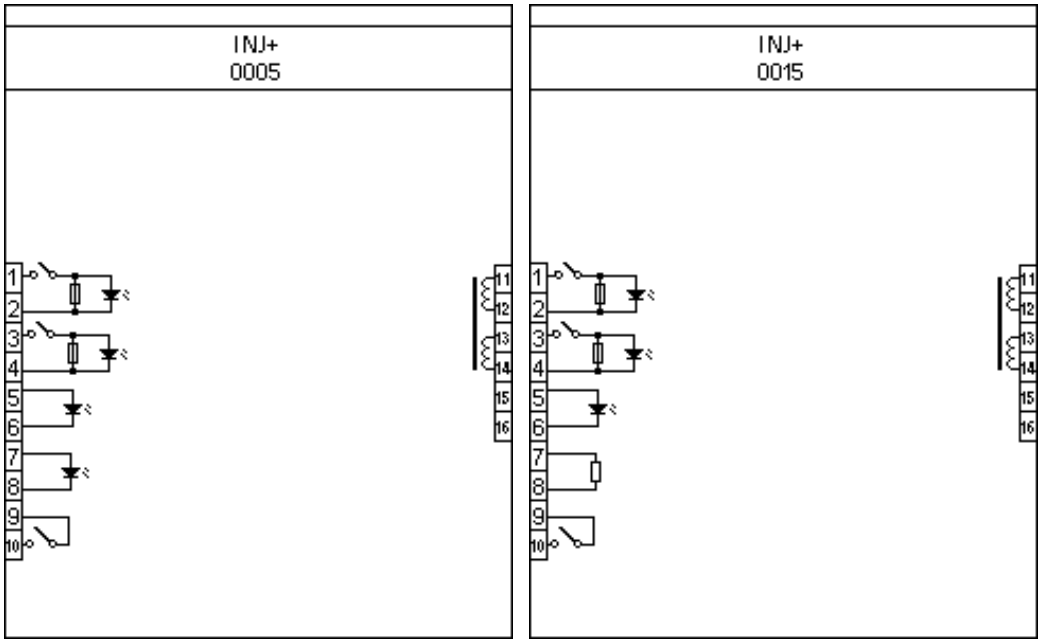

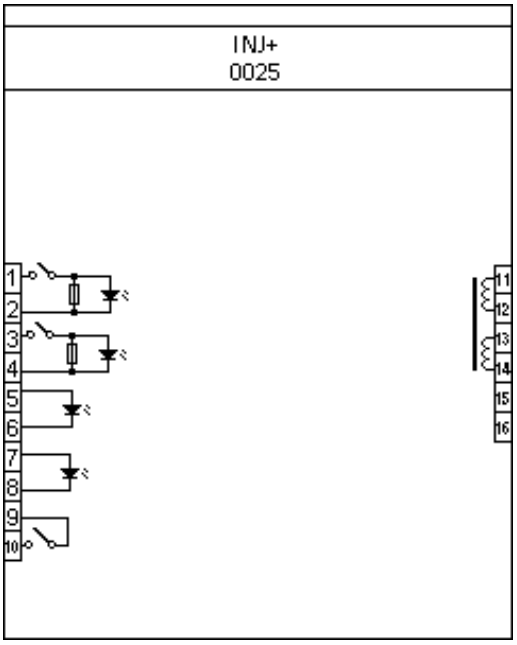

Figure 14-1 Complex INJ modules

14.2 Injection controller

The INJ+/0080T module is not applicable by itself, only in combination with one of the injector transformer modules which are detailed in the next chapter.

MODULE TYPE	INJ+/0080T
INJECTED CURRENT	8 A
ENABLING INPUT CLAMP VOLTAGE	Not available function
BLOCKING INPUT CLAMP VOLTAGE	200 V AC
ADDITIONAL RESISTANCE FOR VOLTAGE INPUT	Not available function
CONNECTOR TYPE	BLT
RECOMMENDED APPLICATION	Arc suppression coil controller

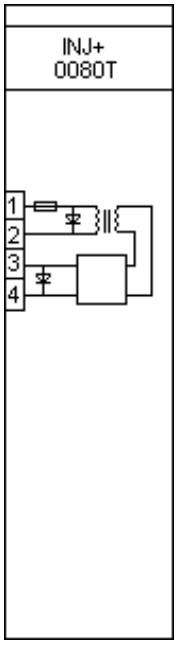

Figure 14-2 Injection controller module

14.3 Injector transformers

The injector transformer modules were developed for the INJ+/0080T injector module. According to user requirements the injector module can be paired with the 2 or the 8 A transformer. In itself, neither module can be applied.

MODULE TYPE	INJTR+/0020	INJTR+/0080
RATIO	1/2	1/2
RATED SECONDER CURRENT	2 A	8 A

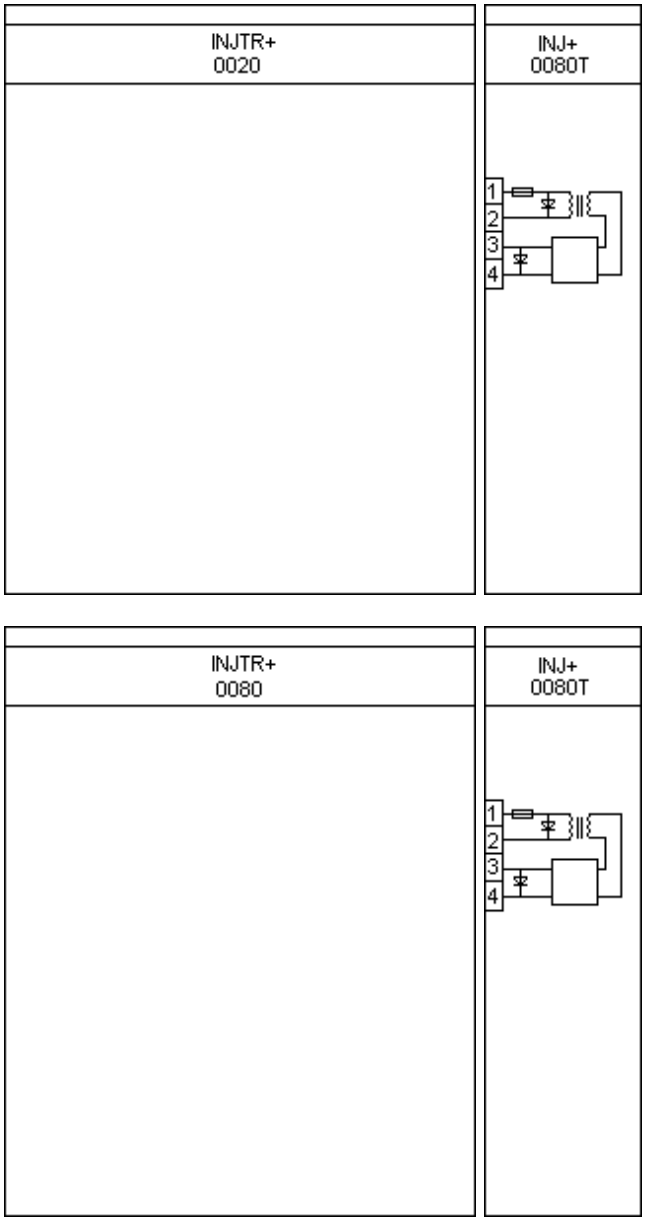

Figure 14-3 INJ+/0080T and INJTR module pairs

15 Generator protection modules

Special generator protection modules whose system measures and produces the necessary analog signals.

Connector types:

- *The default and optionally available connector types are indicated for each module in the tables below. See Chapter 20.2 for details about each type.*

MODULE TYPE	RAI+/01	RAI+/11	RINJ+/21
NOMINAL VOLTAGE	-	-	110 V / 220 V
INPUT VOLTAGE RANGE	-	-	88 - 264 V DC 80 - 250 V AC
OUTPUT VOLTAGE	-	-	100V DC ± 2 %
MEASUREMENT RANGE	± 20 mA	± 20 mA	-
THERMAL WITHSTAND CONTINUOUS: 30 SEC:	 15 mA 20 mA	 10 mA 20 mA	 20 mA
CONNECTOR TYPE	Default: STVS8 Options: T	Default: STVS8 Options: T*	Default: STVS8 Options: T*
RECOMMENDED APPLICATION	Rotor earth-fault protection of middle-grounded rotors	Rotor earth-fault protection of ungrounded (isolated) rotors	Rotor earth-fault protection of ungrounded (isolated) rotors

**By choosing this option, the connector remains the same, only the handle is changed.*

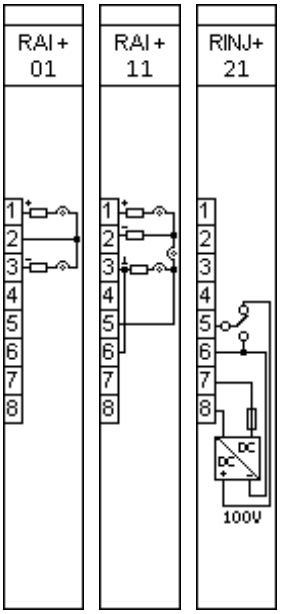

Figure 15-1 Generator protection modules

15.1 Auxiliary boxes for rotor earth fault protection

These DIN-rail mounted external boxes serve as couplings between the rotor (exciter circuit) of the generator and the corresponding RAI module of the protection device.

Note: the data about the resistances and capacitors provided here does not tell the actual time constants of the measured values, as those can be determined on-site only, when the rotor earth fault protection is being tested on the actual generator itself.

MODULE TYPE	RAI+01 BOX	RAI+11 BOX BASE	RAI+11 BOX EXTENSION*
MAXIMUM INPUT VOLTAGE	200 V, 300 V, 400 V, 500 V**	600 V	1200 V
SERIES RESISTANCE ON SIDES	10 kΩ, 15 kΩ, 20 kΩ, 25 kΩ**	35 kΩ	30 kΩ
FILTER CAPACITORS	4x10 µF	2x1 µF	-
CONNECTOR TYPE	Default: STVS6 Options: -	Default: STVS6 Options: -	Default: STVS6 Options: -
RECOMMENDED APPLICATION	Middle-grounded rotors	Ungrounded (isolated) rotors	Ungrounded (isolated) rotors

**This extension module can only be used together with RAI+11 BOX BASE module.*
***According to the chosen wiring.*

15.1.1 Use of auxiliary boxes

Ungrounded (isolated) rotors:

If the excitation voltage is lower than 600 V, then it is enough to use the RAI+11 BOX BASE auxiliary box. If the excitation voltage is higher than 600 V, the RAI+11 BOX EXTENSION auxiliary box shall be used *additionally*, so the protection can connect to up to 1200 V excitation voltage.

Middle-grounded rotors

Front drawings near the connectors on the box itself indicate the available maximum voltages. The choice from these shall be made according to the excitation voltage. Wiring shall be done according to the chosen voltage.

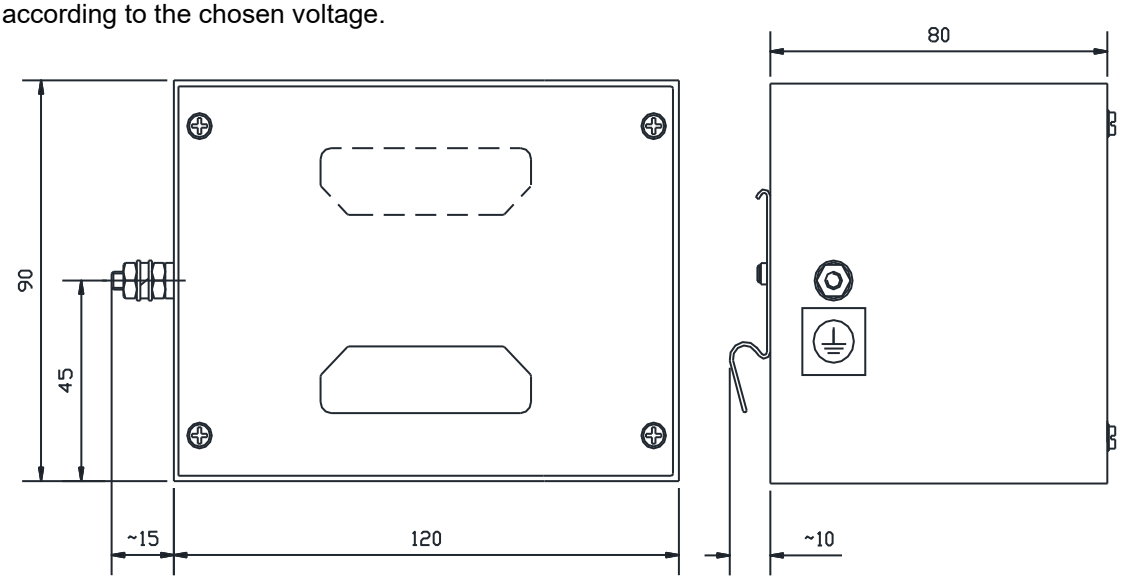

Figure 15-2 Size of the auxiliary boxes

15.2 Wiring of the rotor earth fault protection modules

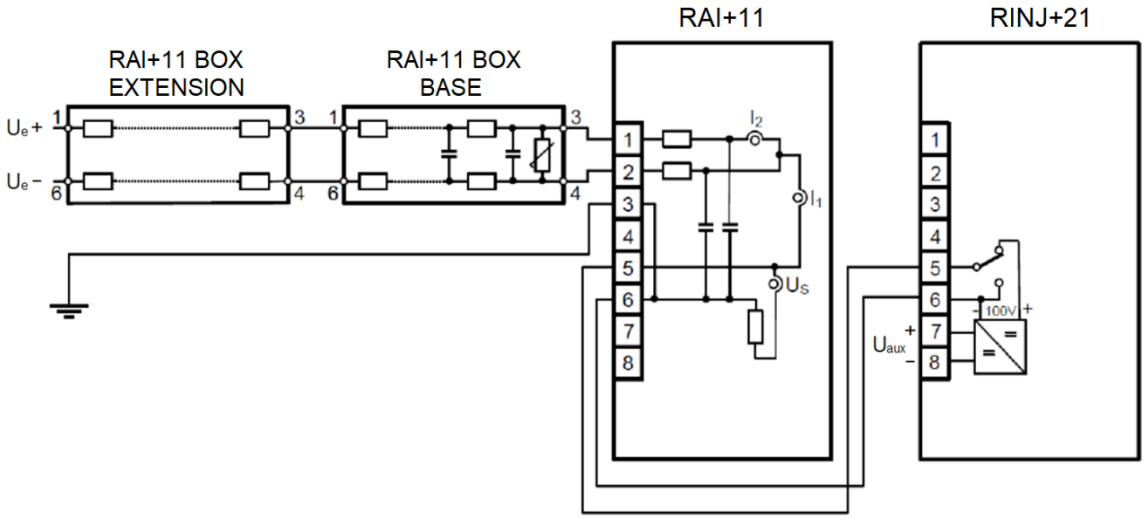

Figure 15-3 Wiring for ungrounded (isolated) rotors

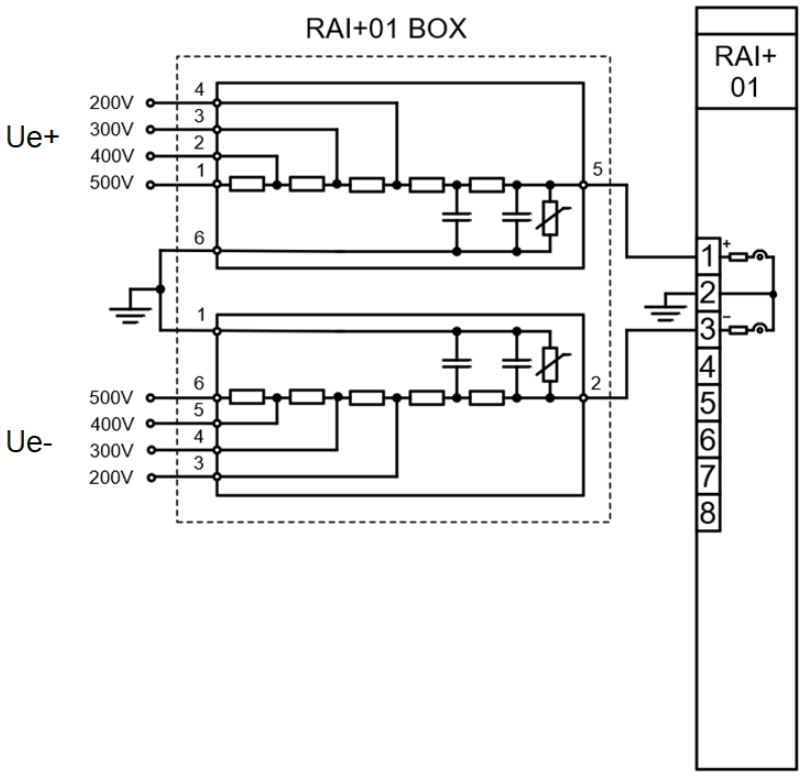

Figure 15-4 Wiring for middle-grounded rotors

16 Power supply module

The power supply module converts primary AC and/or DC voltage to required system voltages. In most applications, one power supply module is sufficient to provide the required power to the system. Redundant power supply modules extend system availability in case of the outage of any power source.

IMPORTANT

Depending on the hardware configuration, the power consumption of the devices can be different. We reserve the right to make the decision about which PS+ module must be used.

For most applications where the power consumption does not reach 20 W, a 4 HP wide PS+ module shall be installed.

Connector types:

- *The default and optionally available connector types are indicated for each module in the tables below. See Chapter 20.2 for details about each type.*

MODULE TYPE	PS+/4201 *(4 HP wide)*	PS+/2101 *(4 HP wide)*
RATED VOLTAGE	24 V DC / 48 V DC / 60 V DC	110 (125) V DC / 220 V DC
INPUT VOLTAGE OPERATIVE RANGE	19.2 - 72 V DC	88 - 264 V DC 80 - 253 V AC
NOMINAL POWER	20 W	20 W
VOLTAGE DIP WITHSTAND AT 80% UN → 0% INPUT VOLTAGE CHANGE *(IEC 60255-26)*	**50 ms** on the rated input voltage, minimum **40 ms** on the specified input voltage operative range	**100 ms** on the specified input voltage operative range
INTERNAL FUSE	3.15A/250V	3.15A/250V
CONNECTOR TYPE	Default: BLA Options: T	Default: BLA Options: T

IMPORTANT

Devices with 20W or higher power consumption shall be equipped with an 8 HP wide PS module.

MODULE TYPE	PS+/1301	PS+/1303**	PS+/2301	PS+/2303**
RATED VOLTAGE	110 V DC	110 V DC	220 V DC	220 V DC
INPUT VOLTAGE OPERATIVE RANGE	88 - 132 V DC 80 - 130 V AC	88 - 132 V DC 80 - 130 V AC	176 - 264 V DC 160 - 253 V AC	176 - 264 V DC 160 - 253 V AC
MAX. CONTINUOUS POWER OUTPUT	30 W	30 W	30 W	30 W
VOLTAGE DIP WITHSTAND AT 80% UN → 0% INPUT VOLTAGE CHANGE *(IEC 60255-26)*	**50 ms** **100 ms** at 100%Un → 0%	**50 ms** **100 ms** at 100%Un → 0%	**50 ms** **100 ms** at 100%Un → 0%	**50 ms** **100 ms** at 100%Un → 0%
INTERNAL FUSE	2.5A/250V	2.5A/250V	2.5A/250V	2.5A/250V
CONNECTOR TYPE	Default: BLA Options: T	Default: BLA Options: -	Default: BLA Options: T	Default: BLA Options: -

Can be connected in parallel.

MODULE TYPE	PS+/1030*	PS+/1060**	PS+/1601	PS+/1602**
RATED VOLTAGE	110 (125) V DC / 220 V DC	110 (125) V DC / 220 V DC	110 V DC	110 V DC
INPUT VOLTAGE OPERATIVE RANGE	88 - 264 V DC 80 - 264 V AC	88 - 264 V DC	88 - 132 V DC 95 - 130 V AC	88 - 132 V DC 95 - 130 V AC
MAX. CONTINUOUS POWER OUTPUT	25 W	60 W	60 W	60 W
VOLTAGE DIP WITHSTAND AT 80% UN → 0% INPUT VOLTAGE CHANGE *(IEC 60255-26)*	**20 ms** **100 ms** at 100%Un → 0%	**20 ms** **100 ms** at 100%Un → 0%	**50 ms** **100 ms** at 100%Un → 0%	**50 ms** **100 ms** at 100%Un → 0%
INTERNAL FUSE	2.5A/250V	3.15A/250V	2.5A/250V	2.5A/250V
CONNECTOR TYPE	Default: BLA Options: T	Default: BLA Options: T	Default: BLA Options: T	Default: BLA Options: T

***Special module**, available only in custom configurations.*
***Special module**, available only in custom configurations. PS+1602 supports **auxiliary voltage measurement**. The module is calibrated to DC voltage measurement.*

MODULE TYPE	PS+/2601	PS+/4301*	PS+/2130	PS+/2135
RATED VOLTAGE	220 V DC	48 V DC	110 V DC / 220 V DC / 110 V AC / 230 V AC	110 V DC / 220 V DC / 110 V AC / 230 V AC
INPUT VOLTAGE OPERATIVE RANGE	176 - 264 V DC 160 - 253 V AC	38.4 - 57.6 V DC	88 - 264 V DC, 88 - 250 V AC	88 - 264 V DC, 88 - 250 V AC
MAX. CONTINUOUS POWER OUTPUT	60 W	25 W	30 W	30 W
VOLTAGE DIP WITHSTAND AT 80% UN → 0% INPUT VOLTAGE CHANGE *(IEC 60255-26)*	**50 ms** **100 ms** at 100%Un → 0%	**20 ms** **30 ms** at 100%Un → 0%	**50 ms**	**50 ms**
INTERNAL FUSE	2.5A/250V	3.15A/250V	3.15A/250V	3.15A/250V
CONNECTOR TYPE	Default: BLA Options: T	Default: BLA Options: -	Default: BLT Options: -	Default: BLT Options: -

Obsolete module. These modules are not recommended for new designs!
****Supports auxiliary voltage measurement.***

MODULE TYPE	PS+/2161	PS+/2162**	PS+/2164*	PS+/4261
RATED VOLTAGE	110 (125) V DC / 220 V DC/ 230 V AC	110 (125) V DC / 220 V DC/ 230 V AC	110 (125) V DC / 220 V DC/ 230 V AC	24 V DC / 48 V DC / 60 V DC
INPUT VOLTAGE OPERATIVE RANGE	88 - 264 V DC 184 - 253 V AC	88 - 264 V DC 184 - 253 V AC	88 - 264 V DC 184 - 253 V AC	19.2 - 72 V DC
MAX. CONTINUOUS POWER OUTPUT	60 W	60 W	60 W	60 W
VOLTAGE DIP WITHSTAND AT 80% UN → 0% INPUT VOLTAGE CHANGE *(IEC 60255-26)*	**50 ms**	**50 ms**	**40 ms**	**40 ms**
INTERNAL FUSE	3.15A/250V	3.15A/250V	3.15A/250V	8A/250V
CONNECTOR TYPE	Default: BLT Options: -	Default: BLT Options: -	Default: BLT Options: -	Default: BLT Options: -

*** Supports auxiliary voltage measurement and can be connected in parallel.***
****Supports auxiliary voltage measurement.***

MODULE TYPE	PS+/4264*	PS+/4401**	PS3F+/1001***
RATED VOLTAGE	24 V DC / 48 V DC / 60 V DC	48 V DC / 60 V DC	3x100 V AC (line voltage)
INPUT VOLTAGE OPERATIVE RANGE	19.2 - 72 V DC	38.4 - 72 V DC	80 - 120 V AC
MAX. CONTINUOUS POWER OUTPUT	60 W	30 W	20 W
VOLTAGE DIP WITHSTAND AT 80% UN → 0% INPUT VOLTAGE CHANGE *(IEC 60255-26)*	**40 ms**	**40 ms**	**50 ms** **100 ms** at 100%Un → 0%
INTERNAL FUSE	8A/250V	3.15A/250V	2.5A/250V
CONNECTOR TYPE	Default: BLT Options: -	Default: BLA Options: T	Default: BLA Options: -

**** Supports auxiliary voltage measurement and can be connected in parallel.***
*****Can be connected in parallel.***
******Special module.*** *At least 2 healthy phase voltages are needed for the operation of the PS3F+1001 module. LEDs on the front of the module indicate the presence of healthy phase voltages. For the correct internal signals connect the common point of the suppling 3 phase voltage to the 4th connector ("N").*

Main features:

- Fault relay contacts (NC and NO): device fault contact and also assignable to user functions. All three relay contact points are accessible to users.
- Redundant applications (nominal power and reliability can be increased by using parallel power supplies)
- On-board self-supervisory circuits: temperature and voltage monitors
- Short-circuit-protected outputs
- Efficiency: > 70 %, power consumption = nominal power / efficiency
- Passive heatsink
- Early power failure indication signals to the CPU for the possibility of power outage, thus the CPU has enough time to save the necessary data to non-volatile memory
- Inrush current (until 0.1 s): < 10 A for all types excluding PS+4401 which has < 21 A inrush current.
- Common features for internal fuses:
    - 5 mm x 20 mm (0.20" x 0.79")
    - TT characteristics (very inverse time-lag)
    - 35 A @ 250 V AC rated breaking capacity
- Recommended external protection: miniature circuit breaker, 6 A (C char.). This fuse is suitable for power supplies of all voltage levels.



Figure 16-1 Power supply modules

17 Sampling synchronization module

The IED sampling system is synchronized via this module to an external source (IRIG-B) in PMU (Phasor Measurement Unit) applications. The PLL of the module handles the setting of the phase and frequency if valid IRIG-B signal is received. Note that the sampling signal is generated even if the IRIG-B signal is not present, however in that case, it runs independently.

MODULE TYPE	TSYNC+/0071
IRIG-B TYPE	B000 (unmodulated)
INPUT TYPE	BNC (coaxial)
SIGNAL THRESHOLD	5 VDC CMOS, max. 5.5 VDC
MAX. CABLE LENGTH	50 m
CLAMP VOLTAGES	falling 1.7 VDC rising 3.1 VDC
SAMPLING ACCURACY*	< 100 ns
IRIG SYNCH. TIME	max. 1 minute
HOLDOVER TIME**	30 s
SAMPLING FREQUENCY	2 kHz @ 50 Hz 2.4 kHz @ 60 Hz
SAMPLING ACCURACY IN INDEPENDENT MODE***	< 1 ppm
CONNECTOR TYPE	Default: BLA Options: T

**Max. time difference between synchronized systems connecting to different GNSS. (e.g. GPS)*
***The sampling accuracy stays below the given value during this time if the IRIG-B signal is lost.*
****The accuracy of the 2/2.4 kHz sampling signal if an IRIG-B signal is not present.*

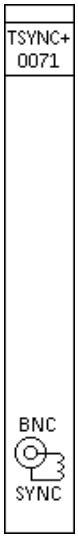

Figure 17-1 Sampling synchronization module

18 Mixed function modules

18.1 PSTP+ module

IMPORTANT

PSTP+ modules can be used only if the power consumption of the device does not reach 20 W and a maximum of 2 TRIP contacts are needed. If the application does not meet any of these two requirements, it is not allowed to use these cards. In this case separate PS+ (Chapter 16) and TRIP+ (Chapter 0) modules must be used.

Connector types:

- *The default and optionally available connector types are indicated for each module in the tables below. See Chapter 20.2 for details about each type.*

Note for the following tables:

- ***Withstand voltage:** continuous with 60 % of the input channels are energized.*

MODULE TYPE	PSTP+/1432	PSTP+/2101	PSTP+/2102*
	POWER SUPPLY CHARACTERISTICS		
RATED VOLTAGE	48 V / 110 V DC	110 (125) V / 220 V	110 (125) V / 220 V
INPUT VOLTAGE OPERATIVE RANGE	38.4 - 132 V DC	88 - 264 V DC 80 - 250 V AC	88 - 264 V DC 80 - 250 V AC
MAXIMUM CONTINUOUS POWER OUTPUT	30 W	20 W	20 W
VOLTAGE DIP DURATION AT 0% RESIDUAL VOLTAGE *(IEC 60255-26)*	**min. 25 ms** in the specified input voltage range	**min. 100 ms** in the specified input voltage range	**min. 100 ms** in the specified input voltage range
INTERNAL FUSE	3.15A/250V	3.15A/250V	3.15A/250V
CONNECTOR TYPE	Default: BLT Options: -	Default: BLA Options: T	Default: BLA Options: -
	TRIPPING CHARACTERISTICS		
CHANNEL NUMBER	2	2	2
RATED VOLTAGE	48 V	110 V DC and 220 V DC or dry contacts	110 V DC and 220 V DC or dry contacts
WITHSTAND VOLTAGE	132 V DC	242 V DC	242 V DC
CONTINUOUS CARRY	6 A	8 A	8 A
MAKING CAPACITY	0.5 s, 30 A	0.5 s, 30 A	0.5 s, 30 A
BREAKING CAPACITY	L/R = 40 ms: 4 A DC	L/R = 40 ms: 4 A DC	L/R = 40 ms: 4 A DC
CONNECTOR TYPE	Default: BLT Options: -	Default: BLA Options: T	Default: BLA Options: -

*****Special module** that supports **auxiliary voltage measurement**. The module is calibrated to DC voltage measurement.*

MODULE TYPE	PSTP+/2104T	PSTP+/2131*	PSTP+/2135
	POWER SUPPLY CHARACTERISTICS		
RATED VOLTAGE	110 (125) V DC / 220 V DC / 230 V AC	110 V / 220 V	110 (125) V DC / 220 V DC / 230 V AC
INPUT VOLTAGE OPERATIVE RANGE	88 - 264 V DC 80 - 250 V AC	88 - 264 V DC 80 - 250 V AC	88 - 264 V DC 80 - 250 V AC
MAXIMUM CONTINUOUS POWER OUTPUT	20 W	20 W	30 W
VOLTAGE DIP DURATION AT 0% RESIDUAL VOLTAGE *(IEC 60255-26)*	**min. 100 ms** in the specified input voltage range	**min. 100 ms** in the specified input voltage range	**50 ms** at nominal input voltages min. **40 ms** in the specified input voltage range
INTERNAL FUSE	3.15A/250V	3.15A/250V	3.15A/250V
CONNECTOR TYPE	Default: BLT Options: -	Default: BLA Options: T	Default: BLA Options: T
	TRIPPING CHARACTERISTICS		
CHANNEL NUMBER	2	2	2
RATED VOLTAGE	110 V DC and 220 V DC or dry contacts	110 V DC and 220 V DC or dry contacts	110 V DC and 220 V DC or dry contacts
WITHSTAND VOLTAGE	242 V DC	242 V DC	242 V DC
CONTINUOUS CARRY	8 A	8 A	6 A
MAKING CAPACITY	0.5 s, 30 A	0.5 s, 30 A	0.5 s, 30 A
BREAKING CAPACITY	L/R = 40 ms: 4 A DC	L/R = 40 ms: 4 A DC	L/R = 40 ms: 4 A DC
CONNECTOR TYPE	Default: BLT Options: -	Default: BLA Options: T	Default: BLA Options: T

Without trip circuit supervision.

MODULE TYPE	PSTP+/4201	PSTP+/4202*	PSTP+/4235
	POWER SUPPLY CHARACTERISTICS		
RATED VOLTAGE	24 V / 48 V / 60 V	24 V / 48 V / 60 V	24 V / 48 V / 60 V
INPUT VOLTAGE OPERATIVE RANGE	19.2 - 72 V DC	19.2 - 72 V DC	19.2 - 72 V DC
MAXIMUM CONTINUOUS POWER OUTPUT	20 W	20 W	30 W
VOLTAGE DIP DURATION AT 0% RESIDUAL VOLTAGE *(IEC 60255-26)*	**50 ms** at nominal input voltages min. **40 ms** in the specified input voltage range	**50 ms** at nominal input voltages min. **40 ms** in the specified input voltage range	**min. 40 ms** in the specified input voltage range
INTERNAL FUSE	3.15A/250V	3.15A/250V	3.15A/250V
CONNECTOR TYPE	Default: BLA Options: T	Default: BLA Options: T	Default: BLT Options: -
	TRIPPING CHARACTERISTICS		
CHANNEL NUMBER	2	2	2
RATED VOLTAGE	24 V DC and 48 V DC or dry contacts	24 V DC and 48 V DC or dry contacts	24 V DC and 48 V DC or dry contacts
WITHSTAND VOLTAGE	72 V DC	72 V DC	72 V DC
CONTINUOUS CARRY	8 A	8 A	6 A
MAKING CAPACITY	0.5 s, 30 A	0.5 s, 30 A	0.5 s, 30 A
BREAKING CAPACITY	L/R = 40 ms: 4 A DC	L/R = 40 ms: 4 A DC	L/R = 40 ms: 4 A DC
CONNECTOR TYPE	Default: BLA Options: T	Default: BLA Options: T	Default: BLT Options: -

Special module* that supports **auxiliary voltage measurement. The module is calibrated to DC voltage measurement.*

Main features:

- High-speed operation: with pre-trip 0.5 ms, without pre-trip typically 10 ms, maximally 22 ms.
- Trip circuit supervision for each trip contact
- 1 unit wide (4 HP) modules
- Inrush current (until 0.1 s): < 10 A
- Common features for internal fuses:
  - 5 mm x 20 mm (0.20" x 0.79")
  - TT characteristics (very inverse time-lag)
  - 35 A @ 250 V AC rated breaking capacity
- Recommended external protection: miniature circuit breaker, 6 A (C char.). This fuse is suitable for power supplies of all voltage levels.

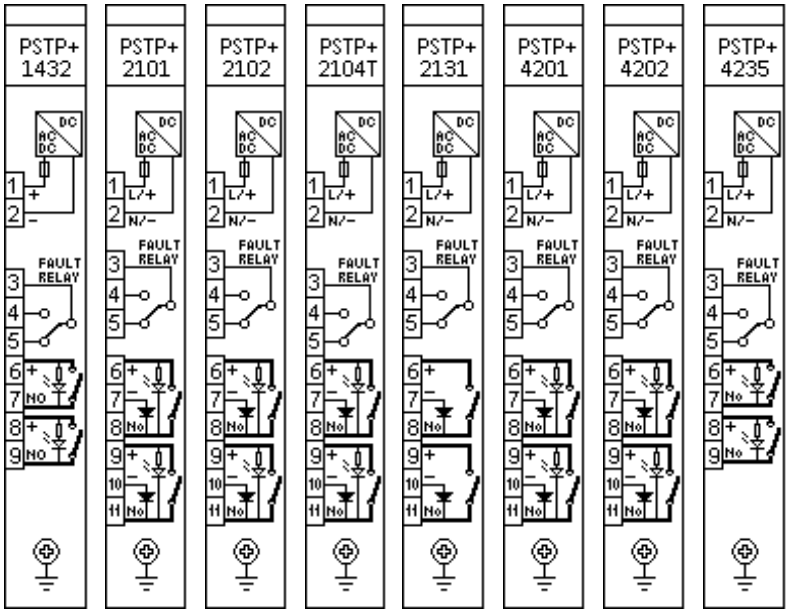

Figure 18-1 Power supply with 2 Ch. TRIP modules

18.1.1 Trip Circuit Supervision (TCS) in PSTP modules

Apart from the PSTP+/2131, all PSTP modules have TCS. The feature is described in detail (tech. data, instructions, etc.) in a separate document:

https://www.protecta.hu/downloads/tcs_en

The technical data of the TCS in PSTP modules:

	Module type	PSTP+/4201 PSTP+/4202	PSTP+/2101 PSTP+/2102
	Injected current at "NO" contact	1.5 mA	1.5 mA
Maximum resistance of the trip coil	3-wire wiring (1 mA current)	**8 kΩ** (max. 8 V)	**13 kΩ** (max. 13 V)
	3-wire wiring in parallel	**4 kΩ** (max. 8 V)	**6.5 kΩ** (max. 13 V)
	2-wire method (1 mA min. current)	**24 kΩ** @ 24 V DC **48 kΩ** @ 48 V DC **60 kΩ** @ 60 V DC	**110 kΩ** @ 110 V DC **220 kΩ** @ 220 V DC

18.2 PSR2+ module

IMPORTANT

PSR2+ modules can be used only if the power consumption of the device does not reach 20 W and a maximum of 2 contacts are needed. If the application does not meet any of these two requirements it is not allowed to use these cards. In this case separate PS+ (Chapter 16) and Signaling (Chapter 0) modules must be used.

Connector types:

- *The default and optionally available connector types are indicated for each module in the table below. See Chapter 20.2 for details about each type.*

MODULE TYPE	PSR2+/2101
	POWER SUPPLY CHARACTERISTICS
RATED VOLTAGE	110 V / 220 V
INPUT VOLTAGE OPERATIVE RANGE	88 - 264 V DC 80 - 250 V AC
MAXIMUM CONTINUOUS POWER OUTPUT	20 W
VOLTAGE DIP DURATION AT 0% RESIDUAL VOLTAGE *(IEC 60255-26)*	**min. 100 ms** in the specified input voltage range
INTERNAL FUSE	3.15A/250V
CONNECTOR TYPE	Default: BLA Options: T
	SIGNALING RELAY CHARACTERISTICS
CHANNEL NUMBER	2
RATED VOLTAGE	400 V AC 250 V DC
CONTINUOUS CARRY	8 A
MAKING CAPACITY	0.5 s, 30 A
CONNECTOR TYPE	Default: BLA Options: T

Main features (according to IEC 60255-1):

- Maximum switching voltage: 400 V AC
- Breaking capacity:
  - Resistive: @ 220 V DC: 0.2A, @ 125 V DC: 0.3A, @110 V DC: 0.4A
  - (L/R=40 ms) @ 220 V DC: 0.1A, @ 125 V DC: 0.21A, @110 V DC: 0.24A
  - (L/R=50 ms) @ 220 V DC: 0.1A, @ 125 V DC: 0.2A, @110 V DC: 0.22A
- Breaking capacity max.: 2000 VA
- Short time carrying capacity: 1s, 35A; 20 ms, 65 A
- Limiting making current, max. 4 s: 15 A (df = 10 %)
- Dielectric strength between open contacts, 1 min: 1000 V_{RMS}
- Mechanical endurance: 100 × 10^3 cycles (8A, 250VAC, cosφ=1, 85°C)
- Circuit closing capability: maximally 10 ms,
- Bounce time: maximally 5 ms.

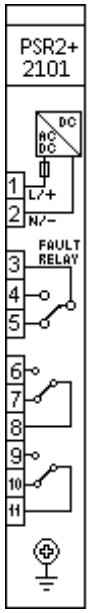

Figure 18-2 Power supply with 2 Ch. signaling modules

18.3 PSTO+ module

IMPORTANT

PSTO+ modules can be used only if the power consumption of the device does not reach 20 W and a maximum of 1 TRIP contact is needed. If the application does not meet any of these two requirements, it is not allowed to use these cards. In this case separate PS+ (Chapter 16) and TRIP+ (Chapter 0) modules must be used.

Connector types:

- *The default and optionally available connector types are indicated for each module in the tables below. See Chapter 20.2 for details about each type.*

Note for the following tables:

- ***Withstand voltage:** continuous with 60 % of the input channels are energized.*
- ***Clamp voltage:** these are the guaranteed values; the actual ones might differ from those provided here (falling and rising around 0.66 U_N and 0.77 U_N, respectively)*

MODULE TYPE	PSTO+/2101
	POWER SUPPLY CHARACTERISTICS
RATED VOLTAGE	110 V / 220 V
INPUT VOLTAGE OPERATIVE RANGE	88 - 264 V DC 80 - 250 V AC
MAXIMUM CONTINUOUS POWER OUTPUT	20 W
VOLTAGE DIP DURATION AT 0% RESIDUAL VOLTAGE *(IEC 60255-26)*	**min. 100 ms** in the specified input voltage range
INTERNAL FUSE	3.15A/250V
CONNECTOR TYPE	Default: BLT Options: -
	TRIPPING CHARACTERISTICS
CHANNEL NUMBER	1
RATED VOLTAGE	110 V DC and 220 V DC or dry contacts
WITHSTAND VOLTAGE	242 V DC
CONTINUOUS CARRY	8 A
MAKING CAPACITY	0.5 s, 30 A
BREAKING CAPACITY	L/R = 40 ms: 4 A DC
CONNECTOR TYPE	Default: BLT Options: -

MODULE TYPE	PSTO+/2101
	BINARY INPUT CHARACTERISTICS
CHANNEL NUMBER	3
RATED VOLTAGE	110 V / 220 V user selectable on channel basis by jumpers
TIME SYNCHRONIZATION	configured by EuroCAP
WITHSTAND VOLTAGE	320 V
CLAMP VOLTAGE	falling 0.64 U_N rising 0.8 U_N
COMMON GROUPS	1 × 3 common
CONNECTOR TYPE	Default: BLT Options: -

Main features:

- High-speed operation: with pre-trip 0.5 ms, without pre-trip typically 10 ms, maximally 22 ms.
- Trip circuit supervision
- 1 unit wide (4 HP) module
- Inrush current (until 0.1 s): < 10 A
- Common features for internal fuses:
  - 5 mm x 20 mm (0.20" x 0.79")
  - TT characteristics (very inverse time-lag)
  - 35 A @ 250 V AC rated breaking capacity
- Recommended external protection: miniature circuit breaker, 6 A (C char.). This fuse is suitable for power supplies of all voltage levels.
- 3x binary inputs

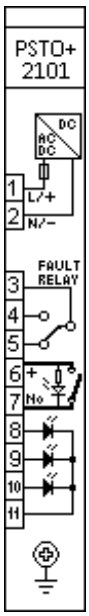

Figure 18-3 Power supply with 1 Ch. Trip module and 3 Ch. Binary Input module

18.4 O6R5+ module

The O6R5+ module contains 6 binary input channels in one grounding group, and 5 relay outputs with 2 × 2 NO contacts and one CO contact.

Connector types:

- *The default and optionally available connector types are indicated for each module in the tables below. See Chapter 20.2 for details about each type.*

Notes for the following table:

- ***Withstand voltage:** continuous with 60 % of the input channels are energized.*
- ***Clamp voltage:** these are the guaranteed values; the actual ones might differ from those provided here (falling and rising around 0.66 U_N and 0.77 U_N, respectively)*

MODULE TYPE	O6R5+/2101	O6R5+/2102
	BINARY INPUT CHARACTERISTICS	
CHANNEL NUMBER	6	6
RATED VOLTAGE	110 V / 220 V user selectable on channel basis by jumpers	110 V / 220 V user selectable on channel basis by jumpers
TIME SYNCHRONIZATION	configured by EuroCAP	configured by EuroCAP
WITHSTAND VOLTAGE	320 V	264 V
CLAMP VOLTAGE	falling 0.64 U_N rising 0.8 U_N	falling 0.64 U_N rising 0.8 U_N
COMMON GROUPS	1 × 6 common	1 × 6 common
	RELAY OUTPUT CHARACTERISTICS	
RATED VOLTAGE	250 V AC/DC	390 V AC/DC
CONTINUOUS CARRY	8 A	8 A
CONTACT VERSIONS	4 NO, 1 CO	4 NO, 1 CO
GROUP ISOLATION	2 × 2 common, 1 independent	2 × 2 common, 1 independent
CONNECTOR TYPE FOR BOTH BINARY INPUT AND RELAY OUTPUT	Default: BLA Options: T	Default: BLA Options: T

MODULE TYPE	O6R5+/4201	O6R5+/4202
	BINARY INPUT CHARACTERISTICS	
CHANNEL NUMBER	6	6
RATED VOLTAGE	24 V / 48 V user selectable on channel basis by jumpers	24 V / 48/60 V user selectable on channel basis by jumpers
TIME SYNCHRONIZATION	configured by EuroCAP	configured by EuroCAP
WITHSTAND VOLTAGE	72 V	72 V
CLAMP VOLTAGE	falling 0.64 U_N rising 0.8 U_N	falling 0.64 U_N rising 0.8 U_N
COMMON GROUPS	1 × 6 common	1 × 6 common
	RELAY OUTPUT CHARACTERISTICS	
RATED VOLTAGE	250 V AC/DC	390 V AC
CONTINUOUS CARRY	8 A	8 A
CONTACT VERSIONS	4 NO, 1 CO	4 NO, 1 CO
GROUP ISOLATION	2 × 2 common, 1 independent	2 × 2 common, 1 independent
CONNECTOR TYPE FOR BOTH BINARY INPUT AND RELAY OUTPUT	Default: BLA Options: T	BLT

Though the states of the inputs are refreshed with 2 kHz frequency, there is a 1 ms built-in analog filtering in them. Additional digital filtering is set in the EuroCAP tool (default: 4 ms).

Main features for binary inputs:

- Digitally filtered per channel
- Current drain:
  - max. 1.6 mA per channel at 220 V DC
  - max. 1.8 mA per channel at 110 V DC
  - max. 2 mA per channel at 48 V DC
  - max. 3 mA per channel at 24 V DC
- In such applications where the input voltage is 60 V the modules with 48 V rated voltage can be used.
- Input voltage type can be either DC or AC voltage. If AC voltage is used make sure that the type and the parameters of the binary inputs are configured properly in EuroCap tool.

Main features for signaling outputs:

- Maximum switching voltage: 400 V AC
- Breaking capacity, (L/R=40 ms) at 220 V DC: 0.1 A, at 110 V DC: 0.2 A
- Breaking capacity max.: 2000 VA
- Short time carrying capacity: 1 s, 35 A
- Limiting making current, max. 4 s: 15 A (df = 10 %)
- Initial dielectric strength between open contacts, 1 min: 1000 V_{RMS}
- Circuit closing capability: typically 10 ms, maximally 22 ms.
- Bounce time: typically 6,5 ms, maximally 10 ms.
- Mechanical endurance: 10×10^6 cycles
- Circuit closing capability

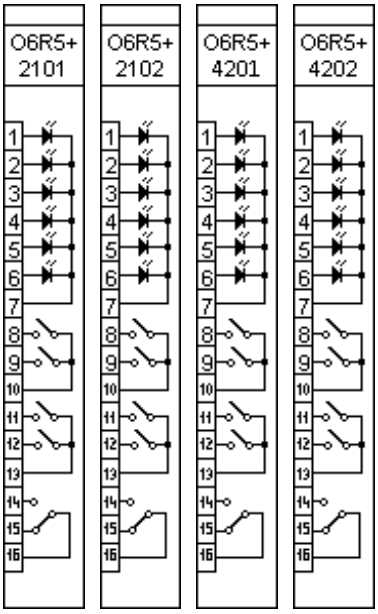

Figure 18-4 Binary input/output modules

18.5 Binary input module with time synchronization

The inputs are galvanically isolated, and the module converts high-voltage signals to the voltage level and format of the internal circuits. This module is also used as an external IRIG-B synchronization **(IRIG-B000, unmodulated)**, PPM or PPS input. Dedicated synchronization input is used for this purpose.

Connector types:

- *The default and optionally available connector types are indicated for each module in the tables below. See Chapter 20.2 for details about each type.*

Notes for the following table:

- ***Withstand voltage:** continuous with 60 % of the input channels are energized.*
- ***Clamp voltage:** these are the guaranteed values; the actual ones might differ from those provided here (falling and rising around 0.66 U_N and 0.77 U_N, respectively)*

MODULE TYPE	O9S+/2111	O9S+/2112	O9S+/2121
CHANNEL NUMBER	9	9	9
SYNCRON CHANNEL TYPE AND NUMBER	1 isolated BNC connector	1 isolated BNC connector	1 850 nm multimode fiber with ST connector
RATED VOLTAGE	110 V / 220 V user selectable by jumpers	110 V / 220 V	110 V / 220 V user selectable by jumpers
WITHSTAND VOLTAGE	320 V	264 V	320 V
WITHSTAND VOLTAGE FOR SYNC. INPUT	35 V_{PEAK}	35 V_{PEAK}	-
CLAMP VOLTAGE	falling 0.64 U_N rising 0.8 U_N	falling 0.64 U_N rising 0.8 U_N	falling 0.64 U_N rising 0.8 U_N
COMMON GROUPS	9 (3 × 3 common)	9 (3 × 3 common)	9 (3 × 3 common)
CONNECTOR TYPE	Default: BLA Options: T	BLT	Default: BLA Options: T

MODULE TYPE	O9S+/4221T	O9S+/4222
CHANNEL NUMBER	9	9
SYNCRON CHANNEL TYPE AND NUMBER	1 850 nm multimode fiber with ST connector	1 850 nm multimode fiber with ST connector
RATED VOLTAGE	24 V DC / 48 V DC user selectable by jumpers	24 V DC / 48/60 V DC
WITHSTAND VOLTAGE	72 V	72 V
WITHSTAND VOLTAGE FOR SYNC. INPUT	35 V_{PEAK}	35 V_{PEAK}
CLAMP VOLTAGE	falling 0.64 U_N rising 0.8 U_N	falling 0.64 U_N rising 0.8 U_N
COMMON GROUPS	9 (3 × 3 common)	9 (3 × 3 common)
CONNECTOR TYPE	Default: BLT Options: -	BLT

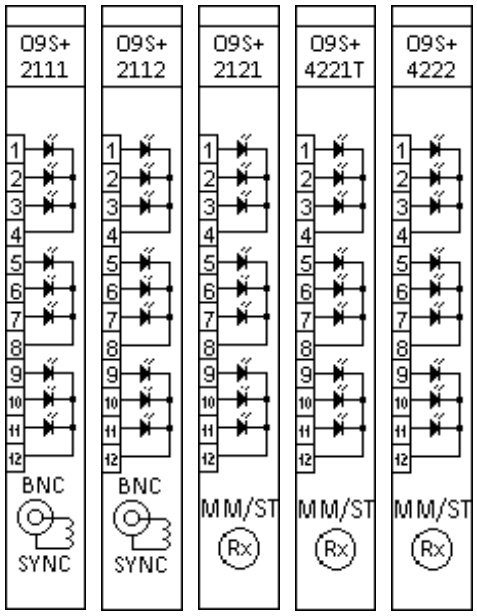

Figure 18-5 Binary input modules with time synchronization

18.6 Externally driven trip module

The R4MC+01 is a special TRIP module, which can be operated from the connector side. It also has two diode inputs with cathodes which are connected and led to the connector side.

Connector types:

- *The default and optionally available connector types are indicated for each module in the tables below. See Chapter 20.2 for details about each type.*

MODULE TYPE	R4MC+/01*
CHANNEL NUMBER	2
RATED VOLTAGE	110 V DC
WITHSTAND VOLTAGE	132 V DC
CONTINUOUS CARRY	8 A
MAKING CAPACITY	0.5 s, 30 A
BREAKING CAPACITY	L/R = 40 ms: 4 A DC
DIODE PROPERTIES	1 A, 1000 V DC
CONNECTOR TYPE	Default: BLA Options: F

**Special module*

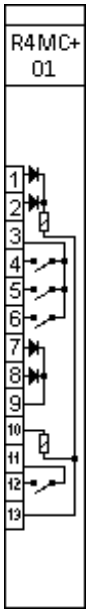

Figure 18-6 Externally driven TRIP module

19 General data

- Storage temperature: - 40 ºC … + 70 ºC
- Operation temperature: - 20 ºC … + 55* ºC
- Humidity: 5 % ... 95 %
- Altitude: up to 2000 m
- Atmospheric pressure: 86 ... 106 kPa

**note: +70 ºC for 16h*

19.1 Standard conformance

- Electrostatic discharge immunity (ESD), IEC-EN 60255-26:2023, Level 4
  - Test voltages: 15 kV air discharge, 8 kV contact discharge
- Radiated, radio-frequency, electromagnetic field immunity, IEC-EN 60255-26:2023 Level 3
  - Test field strength: 20 V/m
- Electrical fast transient/burst immunity (EFT/B), IEC-EN 60255-26:2023, Level 4
  - Test voltage: 4 kV
- Surge immunity test, IEC-EN 60255-26:2023, Level 4
  - Test voltages: 4 kV line-to-earth, 2 kV line-to-line
- Immunity to conducted disturbances, induced by radio-frequency fields, IEC-EN 60255-26:2023, Level 3
  - Test voltage: 10 V
- Damped oscillatory wave immunity test, IEC-EN 60255-26:2023, Level 3
  - Test frequency: 1 MHz
  - Test voltage: 2.5 kV in common mode, 1 kV in differential mode
- Voltage dips, short interruptions and voltage variations immunity, IEC-EN 60255-26:2023
  - Voltage dips: 0 % at 0.8 Un 40 to 100 ms, 40 % (200 ms), 70 % (500 ms), 80 % (5000 ms)
- Ripple on d.c. input power port immunity, IEC-EN 60255-26:2023
  - Level 4, 15 % of rated d.c. value
- Gradual shutdown IEC-EN 60255-26:2023
  - Shut-down ramp 60s, Power off 5 min, Start-up ramp 60s
- Power frequency magnetic field immunity test, IEC-EN 60255-26:2023, Level 5
  - Test field field strength: 100 A/m continuous, 1000 A/m for 3 s
- Power frequency immunity test on the binary inputs, IEC-EN 60255-26:2023, Class A
  - Test voltages: 300 V in common mode, 150 V in differential mode
- Insulation tests, IEC-EN 60255-27:2023
  - Impulse voltage test
    - Test levels: 5 kV (1 kV for transducer and temperature measuring inputs)
  - Dielectric test
    - Test levels: 2,2 kV AC 50 Hz (0.705 kV DC for transducer inputs)
  - Insulation resistance
    - Insulation resistance > 1 MΩ
  - VT input overload tests, IEC-EN 60255-27:2023275 V AC 1 s
  - 350 V DC 1 s
  - 250 V AC
- CT input overload tests
  - continuously 20 A
  - 10 s 175 A
  - 1 s 500 A
  - 10 ms 1200 A

  - Radiated emission, IEC-EN 60255-26:2023

  Limits:
    - 30 MHz to 230 MHz: 50 dB(µV/m) quasi peak, 3 m
    - 230 MHz to 1 000 MHz: 57 dB(µV/m) quasi peak, 3 m
    - 1 GHz to 3 GHz: 76 dB(µV/m) peak,3 m
    - 3 GHz to 6 GHz: 80 dB(µV/m) peak,3 m
- Conducted emission, IEC-EN 60255-26:2023

  Limits:
    - 0,15 MHz to 0,50 MHz: 79 dB(µV) quasi peak, 66 dB(µV) average

- 0,5 MHz - 30 MHz: 73 dB(µV) quasi peak, 60 dB(µV) average

- Vibration, shock, bump and seismic tests on measuring relays and protection equipment
  - Vibration tests (sinusoidal), Class I, IEC 60255-21-1:1988
  - Shock and bump tests, Class I, IEC 60255-21-2:1988
  - Seismic tests, Class I, IEC 60255-21-3:1993

- Contact performance tests IEC-EN 60255-1:2022, IEC 61810-1
  - Mechanical endurance tests
    - Unloaded contact test: 100 x 10^3 cycles
    - Making test: ≥ 1000 cycles
  - Electrical endurance tests
    - Breaking test ≥ 1000 cycles:
      - Signaling contacts: 0.1A @ 220VDC; 0.2A @ 110VDC
      - Tripping contacts: 4A
    - Limiting making capacity test: ≥ 1000W @ L/R = 40 ms
  - Contact current tests
    - Continuous test: ≥ 5A
    - Short time test: 15A 4s

- Communication tests IEC 61850-6 7-1, 7-2, 7-3, 7-4 and 8-1

20 Mechanical data

20.1 General mechanical data

- Construction: chromate aluminum surface with built-in EMC accessories

  - ■ If the power consumption of an 84 HP or 42 HP device does not exceed 30 W (84 HP) or 14 W (42 HP), the construction will be built with solid top and bottom cover panels.
  - □ If the power consumption exceeds 30 W (84 HP) or 14 W (42 HP), the construction will be built with (honeycomb) perforated top and bottom cover panels.

- EMC rack protects against electromagnetic environmental influences and protects the environment from radiation from the interior
- IP protection:
  - 24 HP panel instrument case: IP4x; optionally IP54 (front)
  - 84 HP and 42 HP (including double) rack: IP4x from front side, IP2x from rear side; optionally IP54 (front)
- Size:
  - 19” (84 HP), 3 U, single rack
  - ½ 19” (42 HP), 3 U, single rack
  - ½ 19” (42 HP), 6 U, double rack
  - 24 HP, panel instrument case
- Weight:
  - 84 HP: max. 8 kg
  - 42 HP, 3 U: max. 4.5 kg
  - 42 HP, 6 U: max. 8 kg
  - 24 HP: max. 3 kg

20.2 Connectors

Optionally, certain modules can be equipped with different terminals for different connectors. The available choices are listed among each module's technical data with their *short ID* (see the first column of the table below).

The type of the used terminal is indicated on the module's label with its *short ID* (see the following example). The actual type of the connector is chosen according to the number of the available pins of the module.

Example: the *VT+/2211* module may have four types of connectors. In its description (Chapter 6), these are indicated with their ID:

- The default terminal is indicated with nothing attached (*VT+/2211*), only its name (BLA) is mentioned. Since it has 8 pins, the type is BLA 8/180
- The flanged terminal's *short ID* is **F**, so the module's label will be *"VT+/2211F"*, if it is equipped with this terminal (BLA 8B/180)
- Top-screw terminal: **T**, the label becomes *"VT+/2211T"* (BLT 5.08HC/08/180F)
- Ring-lug terminal: **R**, so the module's label shall be "*VT+/2211R*"

CONNECTOR NAME (SHORT ID)	CONNECTOR TYPES	STRIP LENGTH [MM]	CONDUCTOR AREA [MM^2]	CONDUCTOR DIAMETER [MM]	TIGHTENING TORQUE [NM]	MINIMUM BEND RADIUS*
BLA (-)	Weidmüller BLA 2/180, BLA 3/180, BLA 4/180, BLA 6/180, BLA 8/180, BLA 10/180, BLA 12/180, BLA 13/180, BLA 16/180	7	0.2 – 1.5 solid: 0.2 – 2.5	0.5 – 1.4 solid: 0.5 – 1.8	0.4 – 0.5	3 × OD**
BL 3.5 (-)	Weidmüller BL 3.5/05/180 BL 3.5/09/180	6	0.2 – 1.5	0.5 – 1.4	0.2 – 0.25	3 × OD**
FLANGED (F)	Weidmüller BLA 2B/180, BLA 3B/180, BLA 4B/180, BLA 6B/180, BLA 8B/180, BLA 10B/180, BLA 12B/180, BLA 16B/180	7	0.2 – 1.5 solid: 0.2 – 2.5	0.5 – 1.4 solid: 0.5 – 1.8	0.4 – 0.5	3 × OD**
TOP-SCREW (T)	Weidmüller BLT 5.08HC/02/180F, BLT 5.08HC/03/180F, BLT 5.08HC/06/180F, BLT 5.08HC/08/180F, BLT 5.08HC/12/180F, BLT 5.08HC/16/180F	13	0.2 – 1.5 solid: 0.2 – 2.5	0.5 – 1.4 solid: 0.5 – 1.8	0.4 – 0.5	3 × OD**
RING-LUG (R)	TE Connectivity BC6-Q308-08	-	0.33 – 3.31	0.65 – 2.05	0.79	3 × OD**

** Bend radius is measured along the inside curve of the wire or wire bundles.*
*** OD is the outer diameter of the wire or cable, including insulation.*

CONNECTOR NAME (SHORT ID)	CONNECTOR TYPES	STRIP LENGTH [MM]	CONDUCTOR AREA [MM^2]	CONDUCTOR DIAMETER [MM]	TIGHTENING TORQUE [NM]	MINIMUM BEND RADIUS*
STVS (-)	Weidmüller STVS 6 SB, STVS 8 SB	9	0.5 – 4	0.8 – 2.3	0.5 – 0.6	3 × OD**
B2L 3.5	Weidmüller B2L 3.5	7	0.2 – 1	0.5 – 1.1	tension clamp connection	3 × OD**
ST/FC/LC	Bayonet/Screw/ Snap Fiber Optic	-	-	-	-	30 mm
PE FASTON TERMINAL	TE Connectivity 6.3x0.8	7	min. 4	min. 2.3	-	3 × OD**
5CDG 7.62 (P)	DEGSON 5CDG-7.62-08P	10	0.2 – 4.0	0.3 – 2.5	0.5	3 × OD**

** Bend radius is measured along the inside curve of the wire or wire bundles.*
*** OD is the outer diameter of the wire or cable, including insulation.*

The tightening torque of the screw for protective earth connection and the wall mounting must be approx. 5 Nm. The tightening torque of the screw for fastening the STVS connector must be approx. 1 Nm.

The minimum distance between an EP+ device and its wire channel must be at least 3 cm. The minimum distance between two EP+ devices must be at least 10 cm.

During the installation make sure that the shortest possible length for PE (Protective Earth) cable routing is applied.

21 Mounting methods

- Flush mounting
  - 84 HP single rack
  - 42 HP single rack
  - 42 HP double rack
  - 24 HP panel instrument case
  - Remote HMI
- Rack mounting
  - 84 HP single rack
  - 42 HP single rack
  - Remote HMI
- Semi-flush mounting
  - 84 HP single rack
  - 42 HP single rack
  - 24 HP panel instrument case
  - Remote HMI
- Wall mounting (with terminals)
  - 84 HP single rack
  - 42 HP single rack
- Din rail mounting
  - 24 HP panel instrument case
- IP54 rated mounting
  - 84 HP single rack
  - 42 HP single rack
  - 24 HP panel instrument case (original frame with additional gasket)
- Fold-down mounting (with optional terminals)
  - 84 HP single rack
  - 42 HP single rack
- No mounting
  - 84 HP single rack
  - 42 HP single rack

MOUNTING METHOD	84 HP SINGLE RACK	42 HP SINGLE RACK	42 HP DOUBLE RACK	24 HP PANEL INSTRUMENT CASE	REMOTE HMI
FLUSH MOUNTING	x	x	x	x	x
RACK MOUNTING	x	x			x
SEMI-FLUSH MOUNTING	x	x		x	x
WALL MOUNTING (WITH TERMINALS)	x	x			
DIN RAIL MOUNTING				x	
IP54 RATED MOUNTING	x	x		x*	
FOLD-DOWN MOUNTING	x	x			

**Additional gasket inserted into the original front panel frame.*



It is recommended to leave at least 80 mm free space for the wiring at the back of the IED in case of Flush mounting, Rack mounting, and Semi-flush mounting.

21.1 Flush mounting

Flush mounting can be used for all sizes of racks (84 HP, 42 HP, double 42 HP) including the 24 HP panel instrument case and the remote HMI devices. When this type of mounting alternative is used the 84 HP, 42 HP, double 42 HP and remote HMI devices have got a cover profile fit on and the 24 HP devices have got a mounting frame fit on.

The dimensions of the cut-outs for the 84 HP and 42 HP devices are also applicable for the same sized remote HMI devices.

21.1.1 Flush mounting of 84 HP and 42 HP single rack

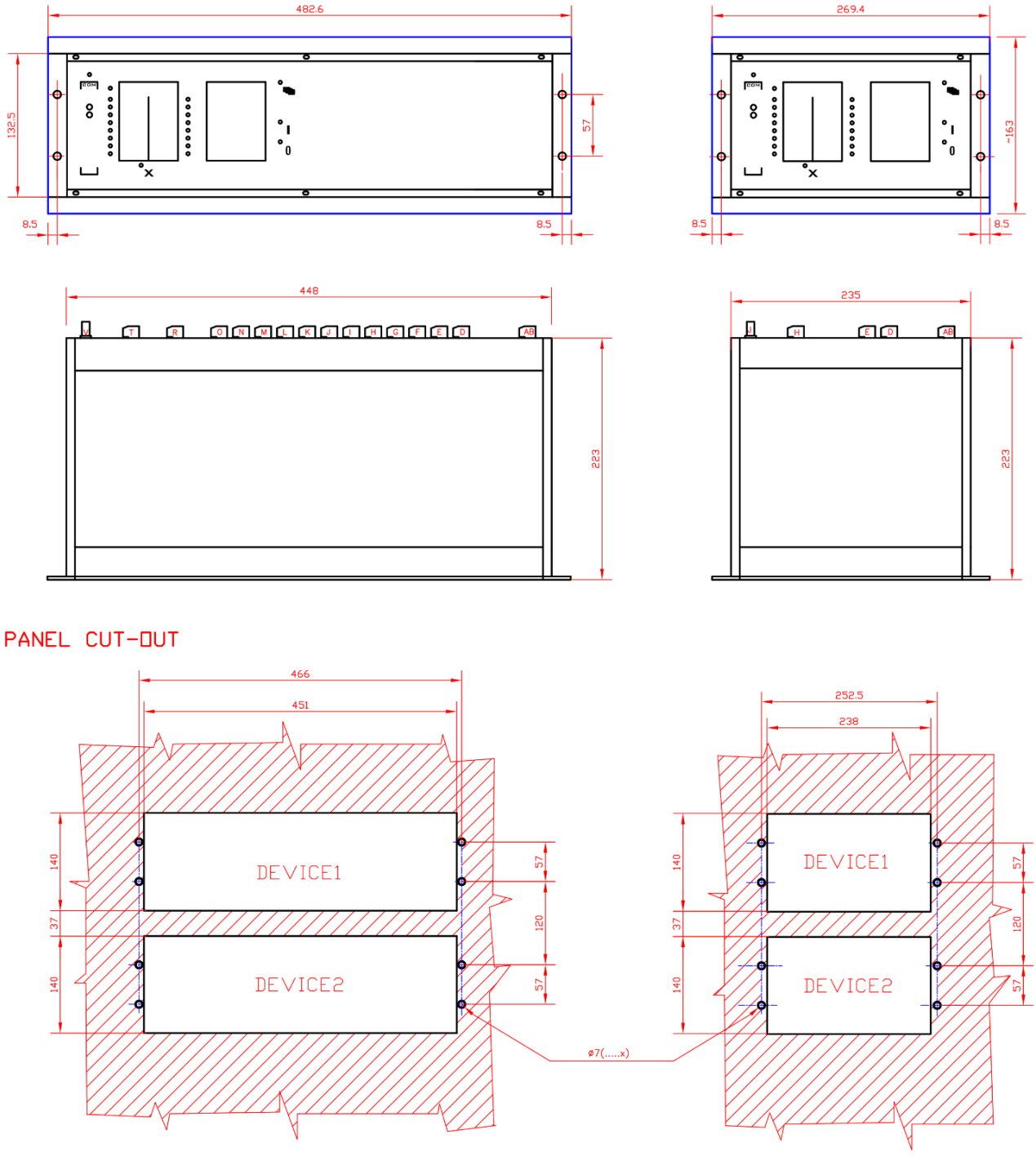

Figure 21-1 Dimensions for flush mounting of 84 HP and 42 HP single rack

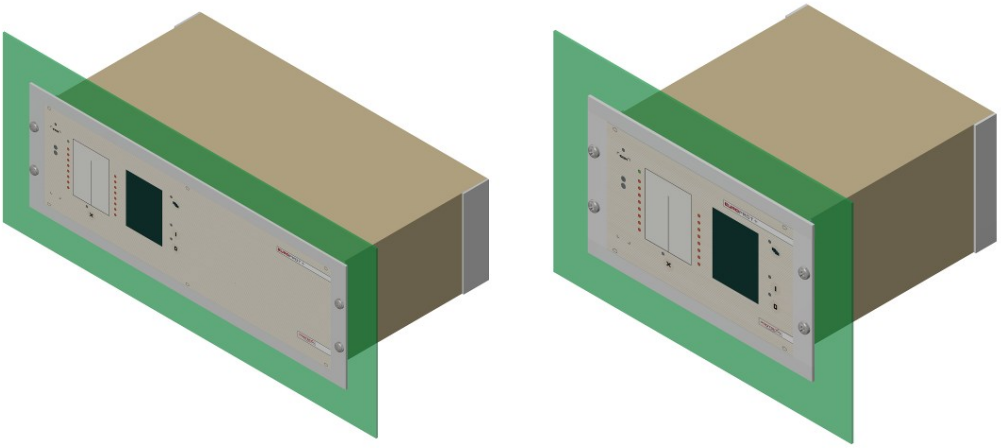

Figure 21-2 3D illustration for flush mounting of 84 HP and 42 HP devices

21.1.2 Flush mounting of 42 HP double rack

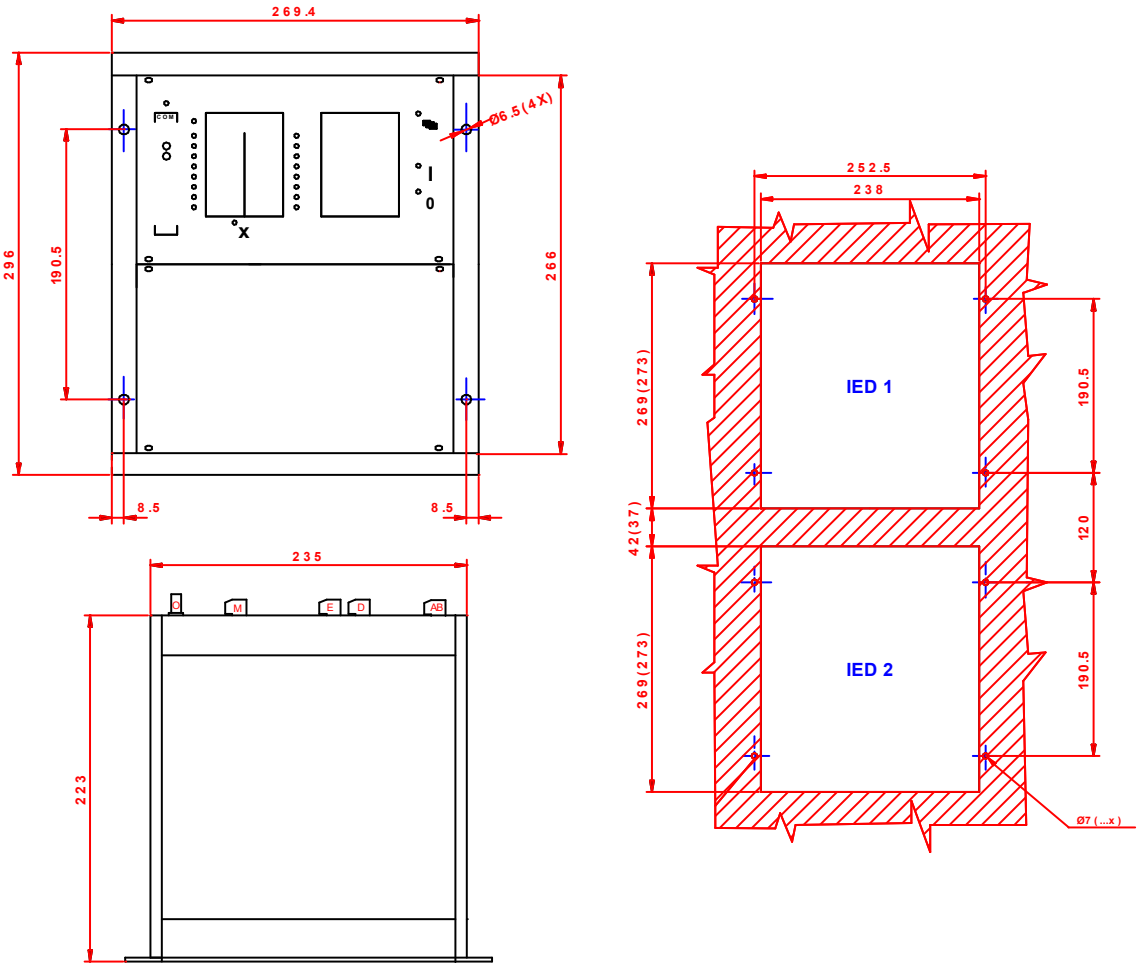

Figure 21-3 Dimensions for flush mounting of 42 HP double rack



Figure 21-4 42 HP wide cover profile

21.1.3 Flush mounting of 24 HP panel instrument case

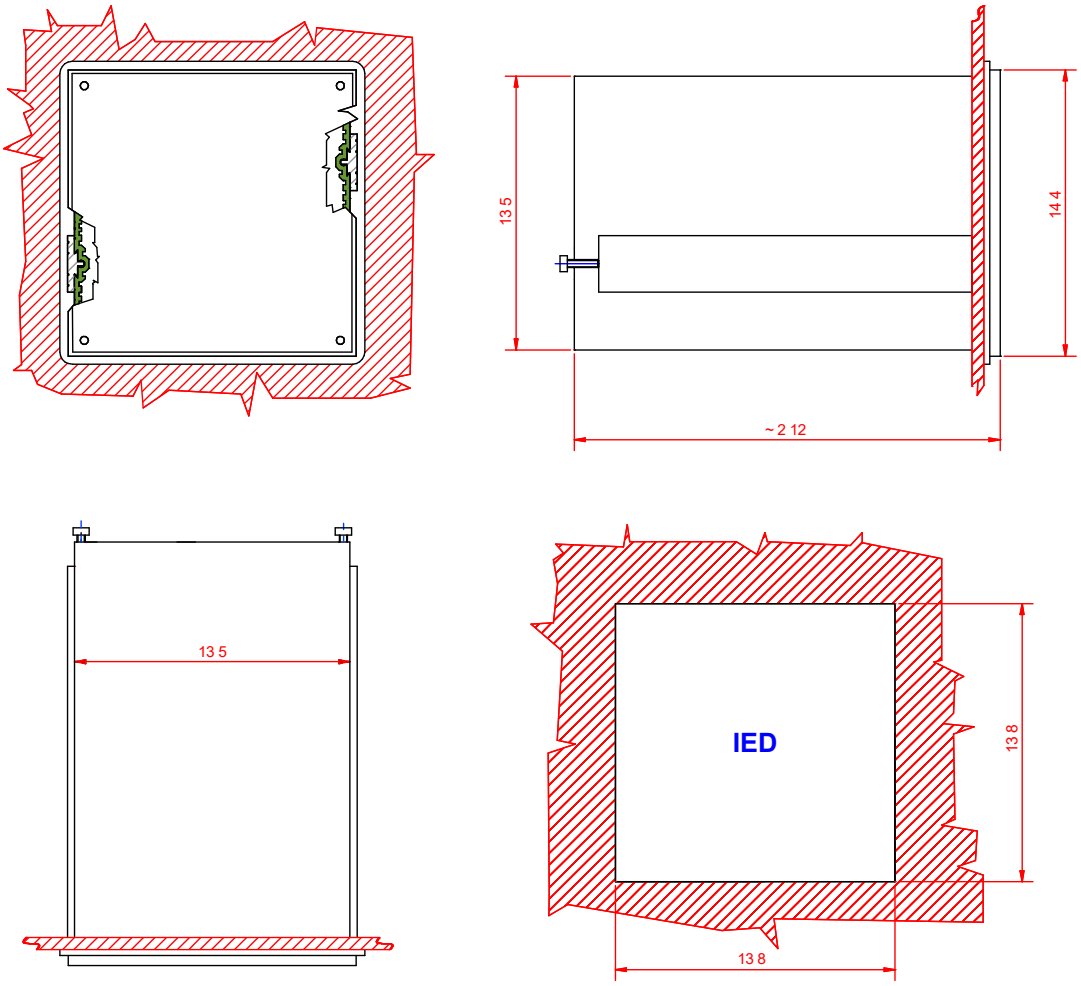

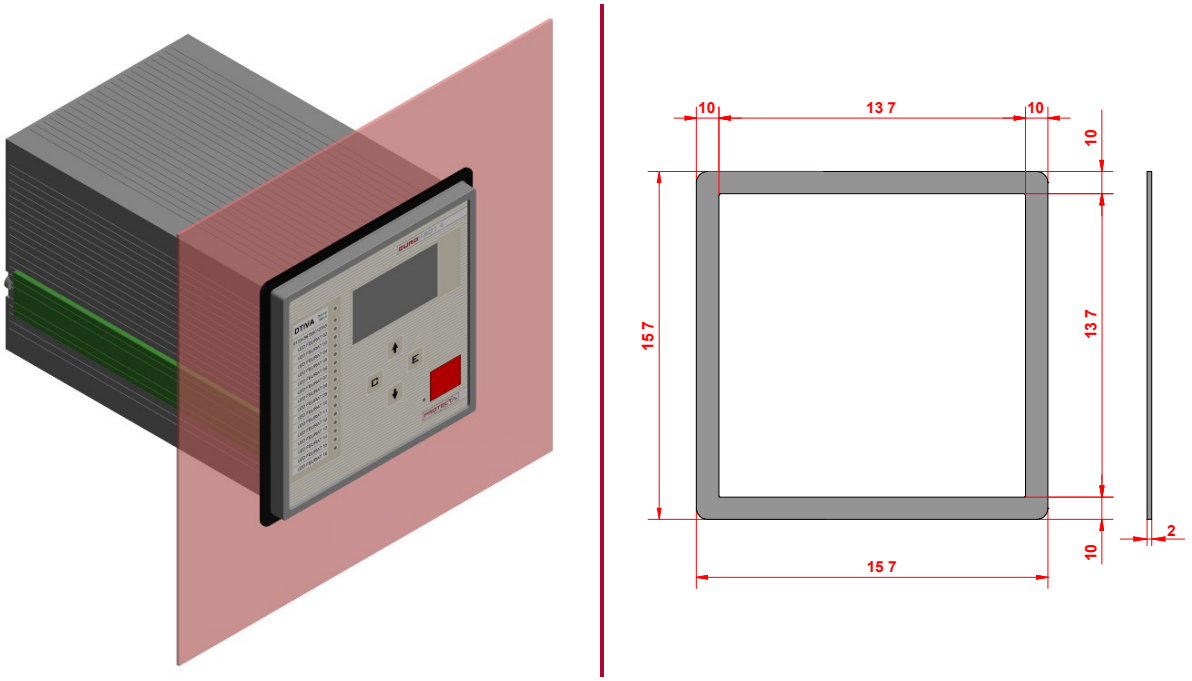

Figure 21-5 Dimensions for flush mounting of 24 HP panel instrument case with 3D illustration

21.2 Rack mounting

When rack mounting is used, the devices do not have a cover profile fit on, so it is possible to mount them in a 19" rack.

21.2.1 Rack mounting of 84 HP and 42 HP single rack

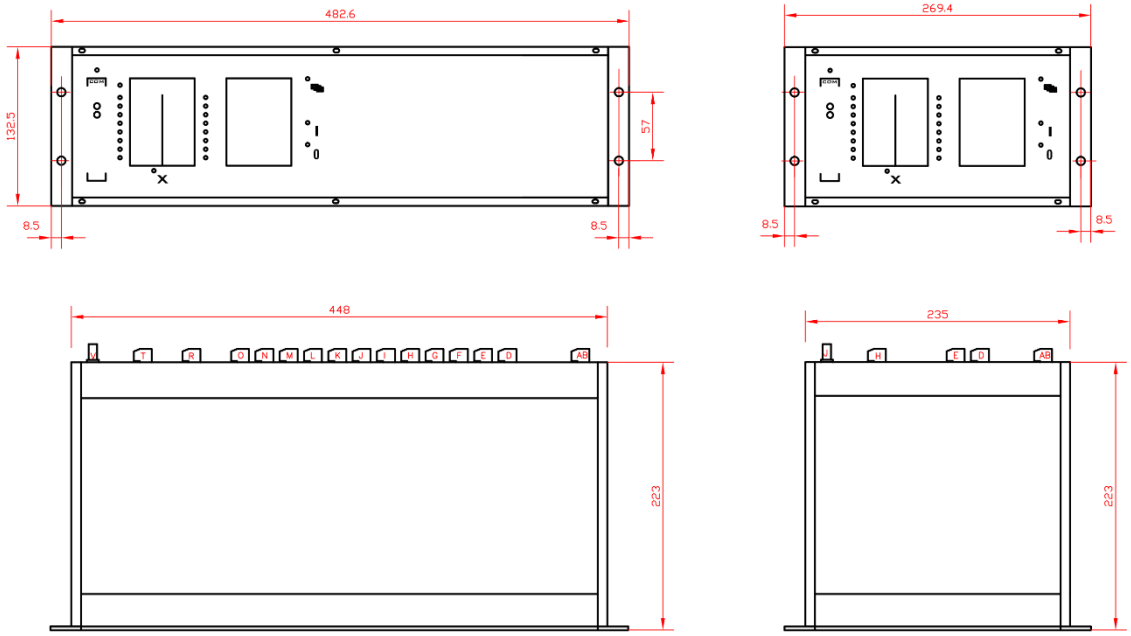

Figure 21-6 Dimensions for rack mounting of 84 HP and 42 HP single rack

Note that rack mounting type devices can also be mounted in a cut-out (e.g. on a switchgear door). It is possible to mount them from the front or from the back of the cut-out. The dimensions for rack mounting cut-outs are in the figure below. Dimensions in brackets are applicable in case of mounting from the back.

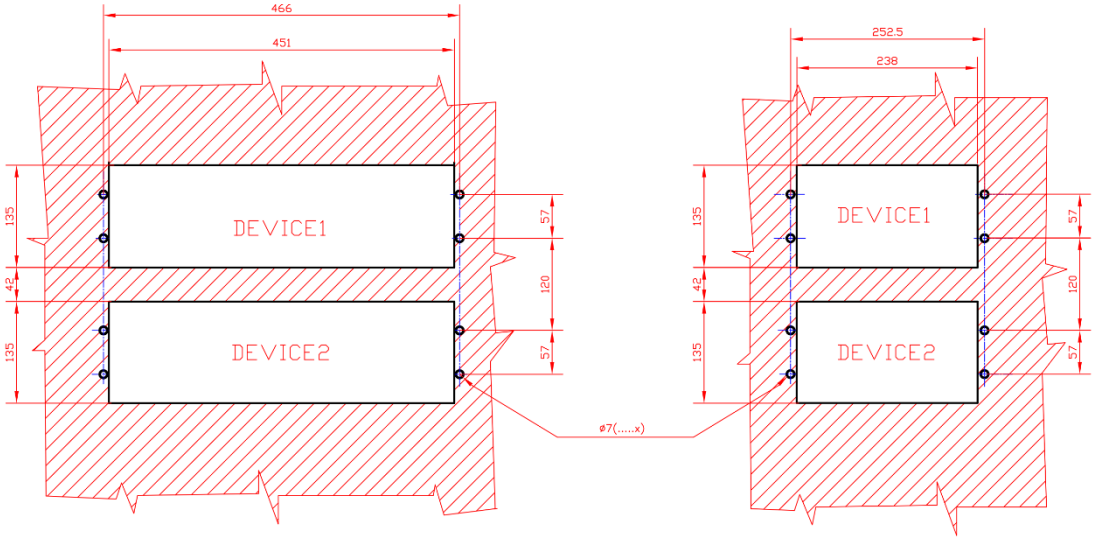

Figure 21-7 Dimensions of rack mounting cut-outs

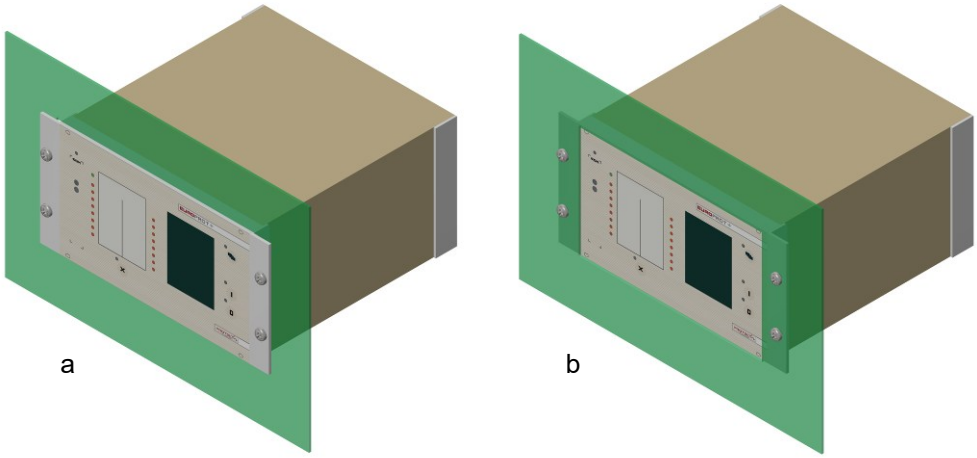

Figure 21-8 3D illustration for rack mounting of 42 HP device
(a - from the front; b - from the back)

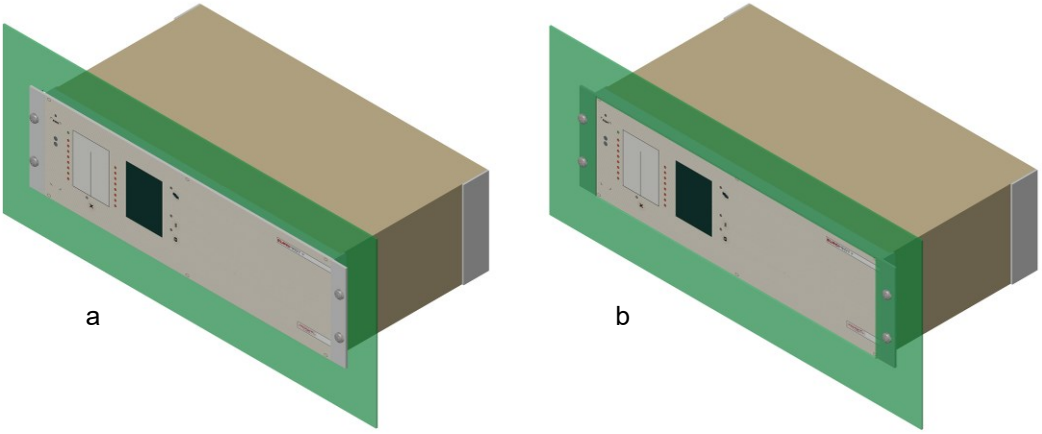

Figure 21-9 3D illustration for rack mounting of 84 HP device
(a - from the front; b - from the back)

21.2.2 Rack mounting of 42 HP double rack

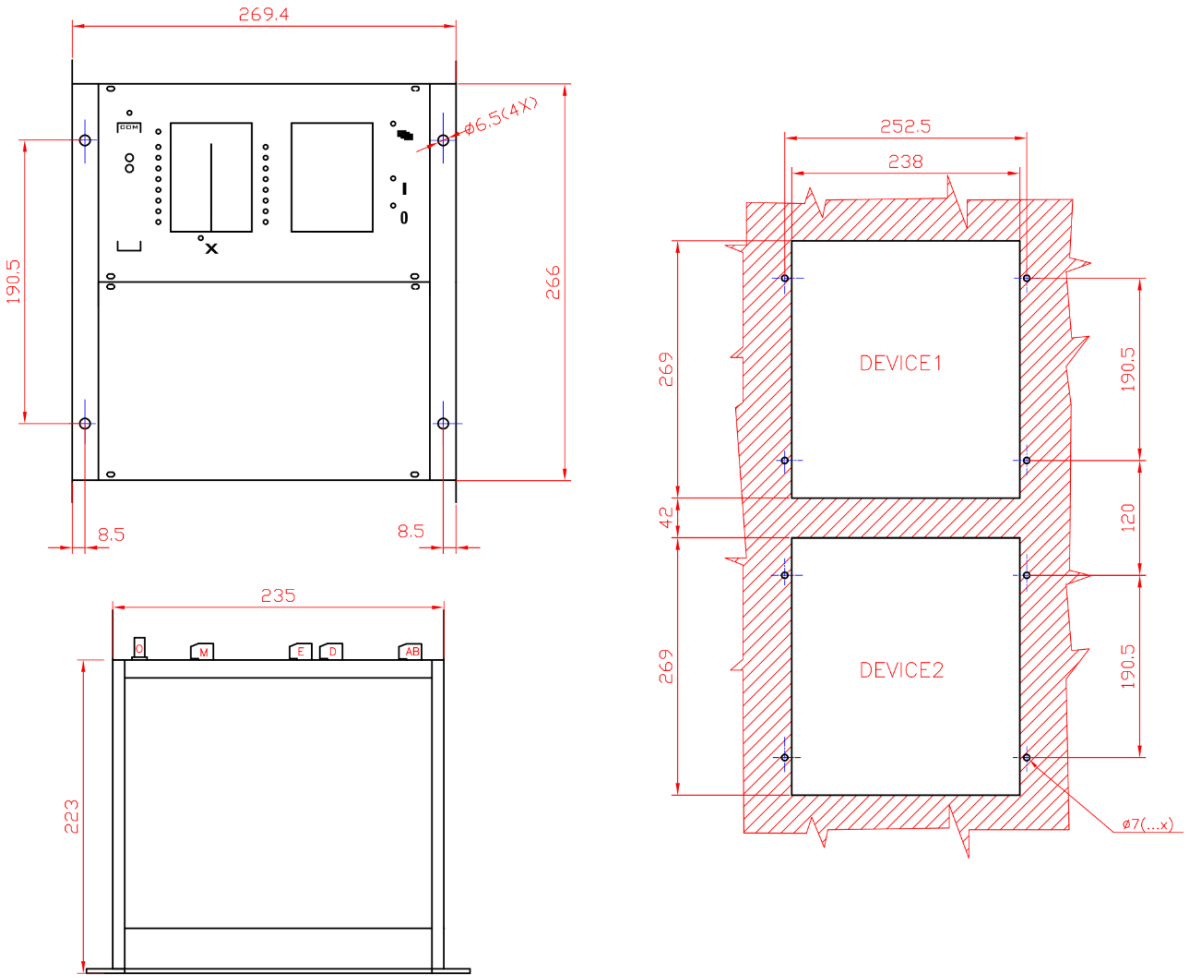

Figure 21-10 Dimensions for rack mounting of 42 HP double rack

21.3 Semi-flush mounting

Semi-flush mounting can be used for 84 HP and 42 HP single racks, for 24 HP panel instrument cases and for remote HMI devices. The purpose of this type of mounting alternative is to reduce the depth of the devices in the switchgear/rack if there is not enough space in that direction. To achieve this, a special mounting collar must be fit on the rack type devices. The default color of the mounting collar is grey (RAL 7035).

The dimensions of the special mounting collars and the cut-outs for the 84 HP and 42 HP devices are also applicable for the same sized remote HMI devices.

21.3.1 Semi-flush mounting of 84 HP single rack

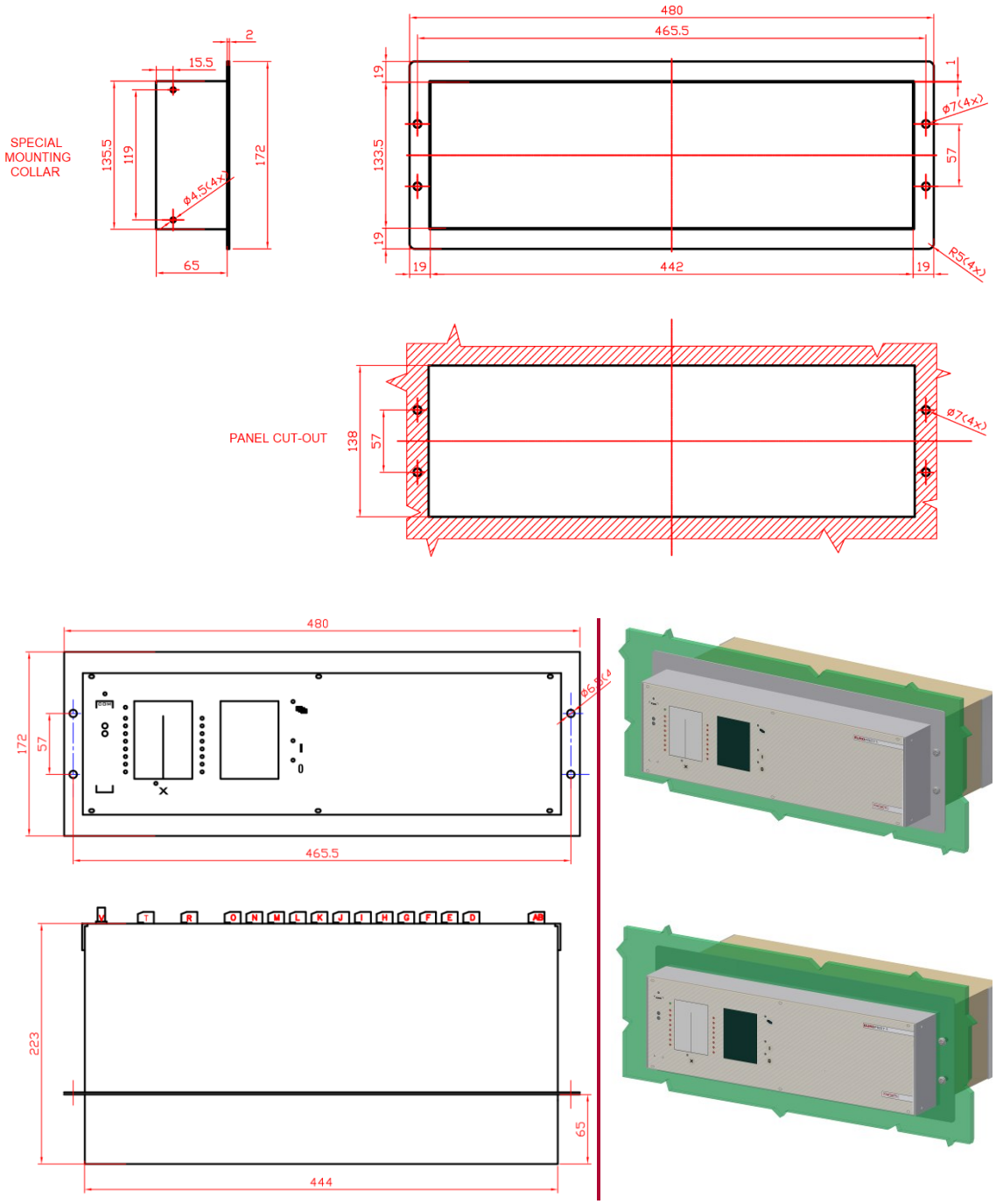

Figure 21-11 Dimensions for semi-flush mounting of 84 HP single rack with 3D illustration

21.3.2 Semi-flush mounting of 42 HP single rack

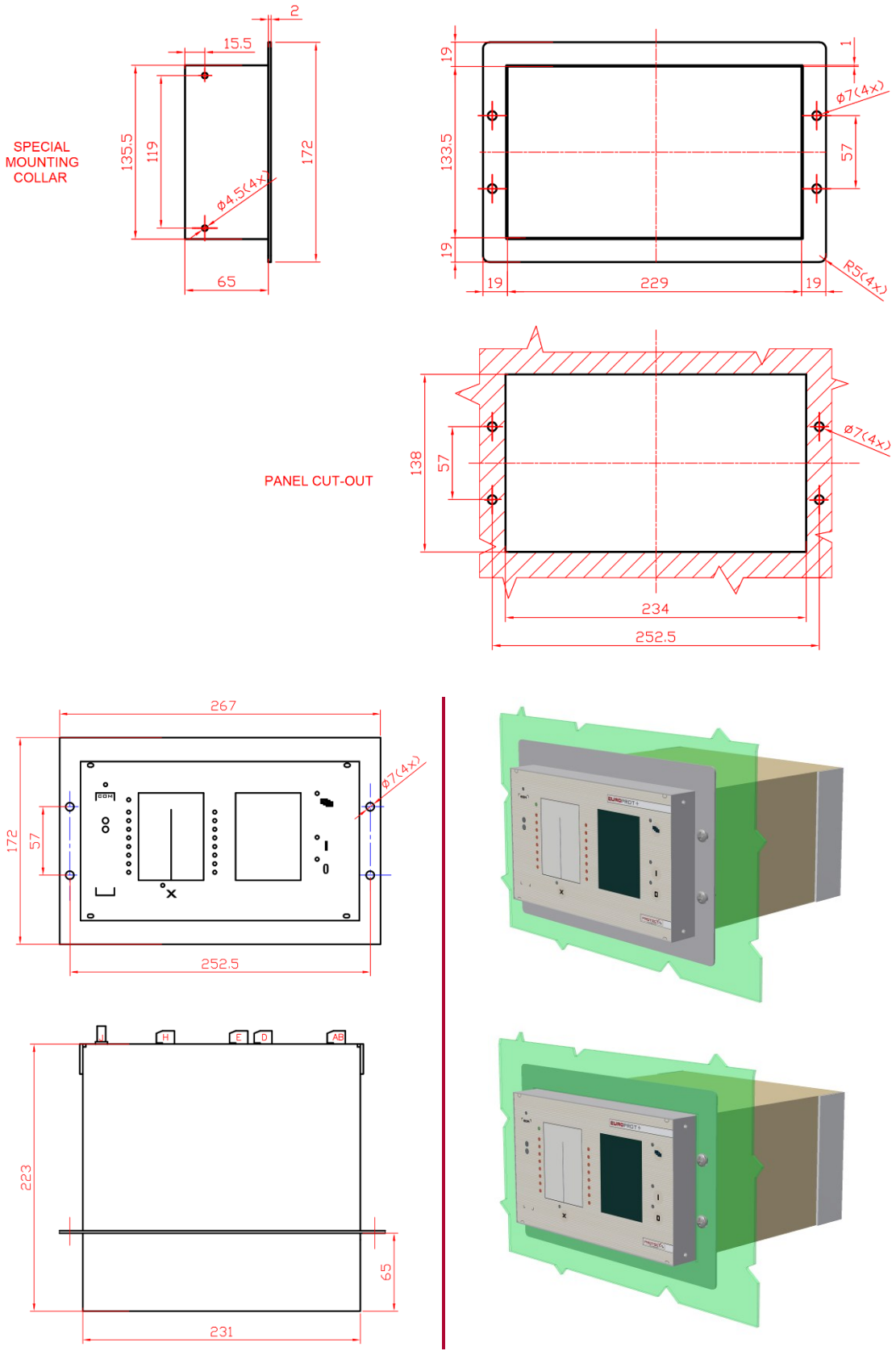

Figure 21-12 Dimensions for semi-flush mounting of 42 HP single rack with 3D illustration

21.3.3 Semi-flush mounting of 24 HP panel instrument case

The dimensions of the panel cut-out for this type of mounting method are the same as in case of flush mounting (138 mm × 138 mm). For semi flush mounting, it is enough to cut in two the fixing elements (with green color in the 3D illustration below) and to make the assembly as shown in the pictures below.

Note that the IP54 front panel option cannot be utilized with this type of mounting.

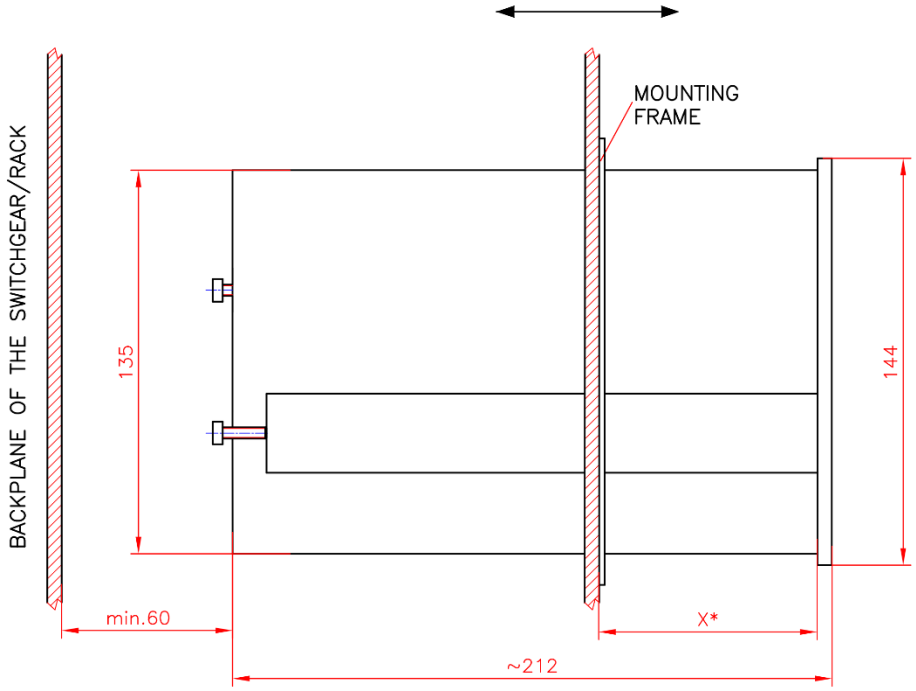

X - maximum 75 mm

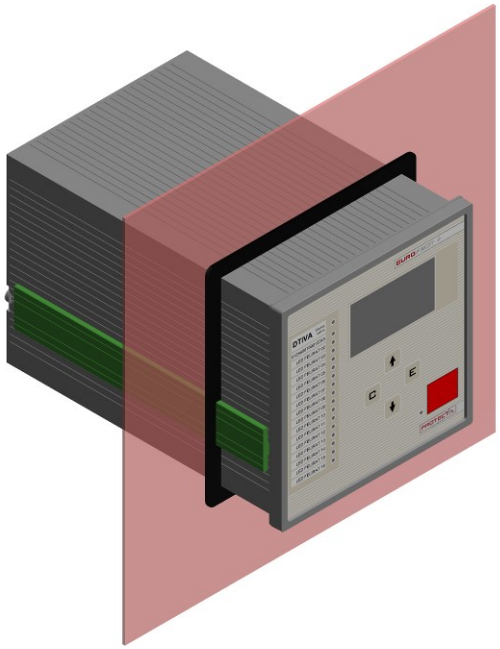

Figure 21-13 Dimensions for semi-flush mounting of 24 HP panel instrument case with 3D illustration

21.4 Wall mounting of 42 HP and 84 HP devices

Depending on the number of terminal contacts, it is possible to use both upper and lower terminals.

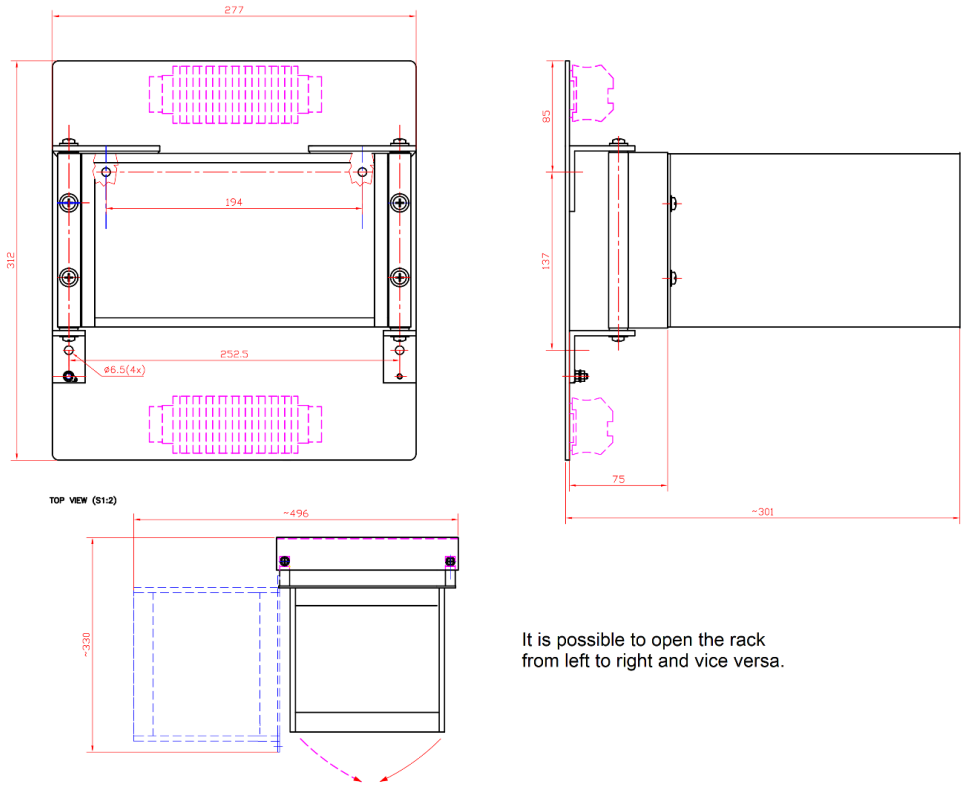

Figure 21-14 Dimensions for wall mounting of 42 HP devices (upper and lower terminals)

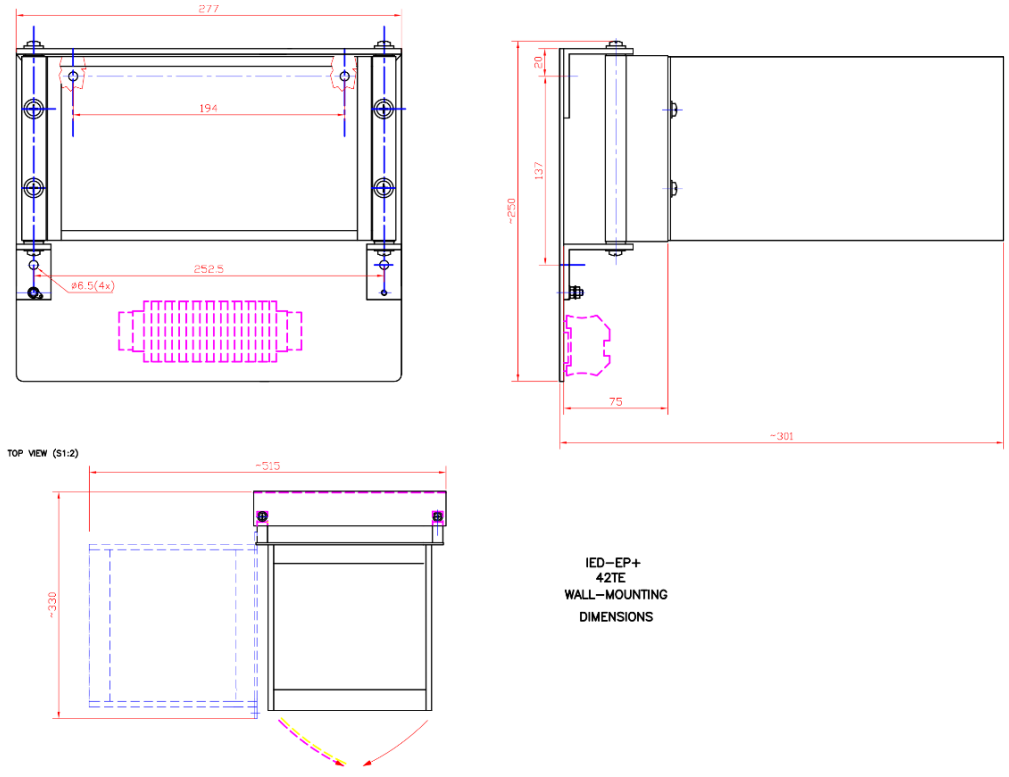

Figure 21-15 Dimensions for wall mounting of 42 HP devices (lower terminal only)

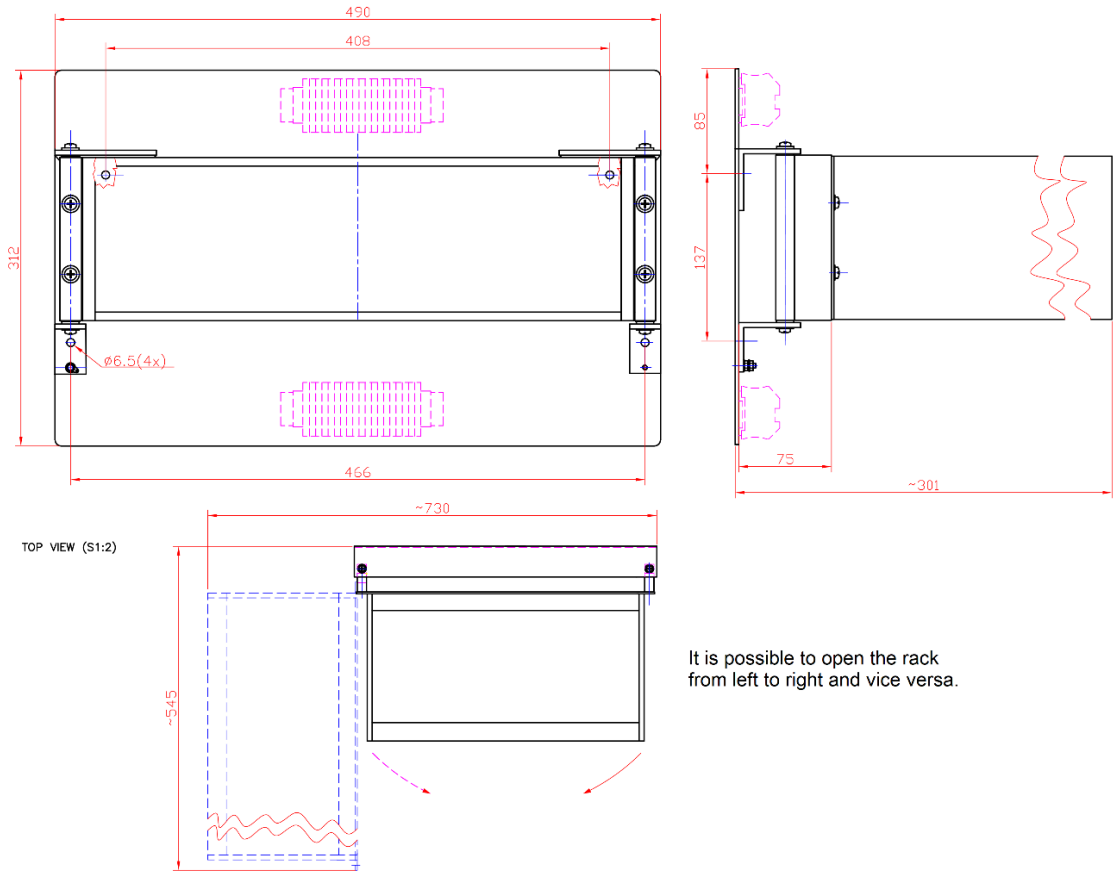

Figure 21-16 Dimensions for wall mounting of 84 HP devices (upper and lower terminals)

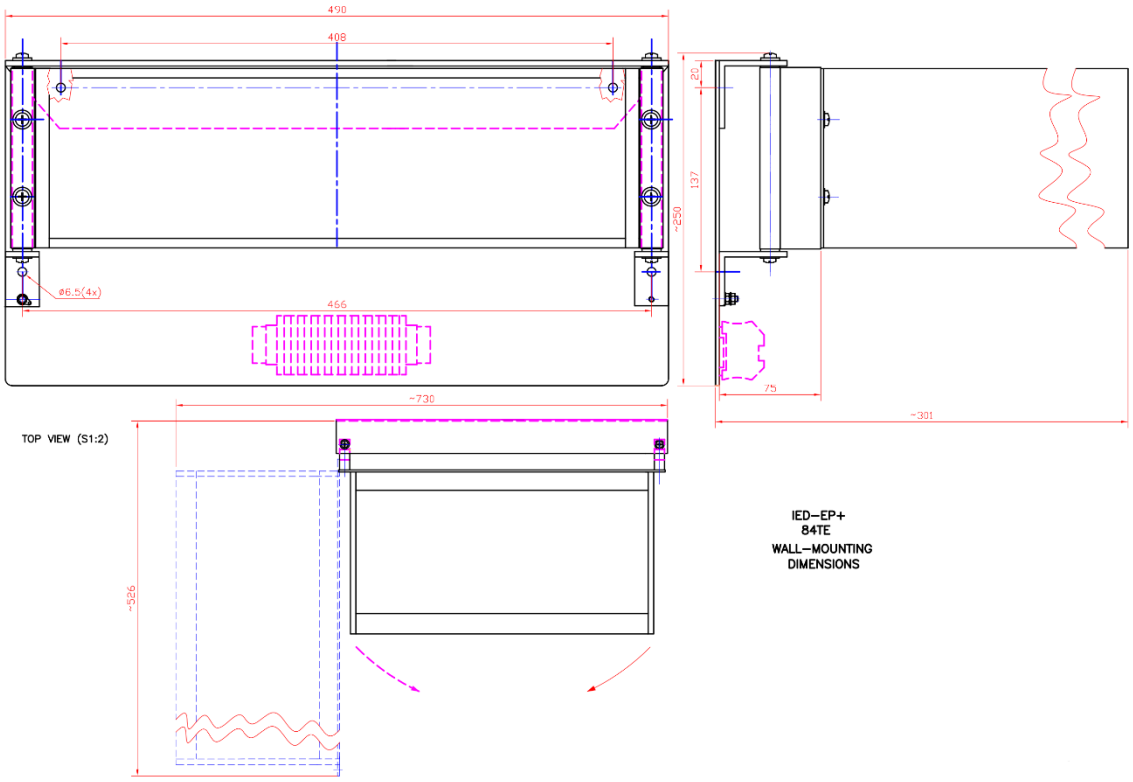

Figure 21-17 Dimensions for wall mounting of 84 HP devices (lower terminals only)

21.5 Din rail mounting of 24 HP panel instrument case

Note that the IP54 front panel option cannot be utilized with this type of mounting.

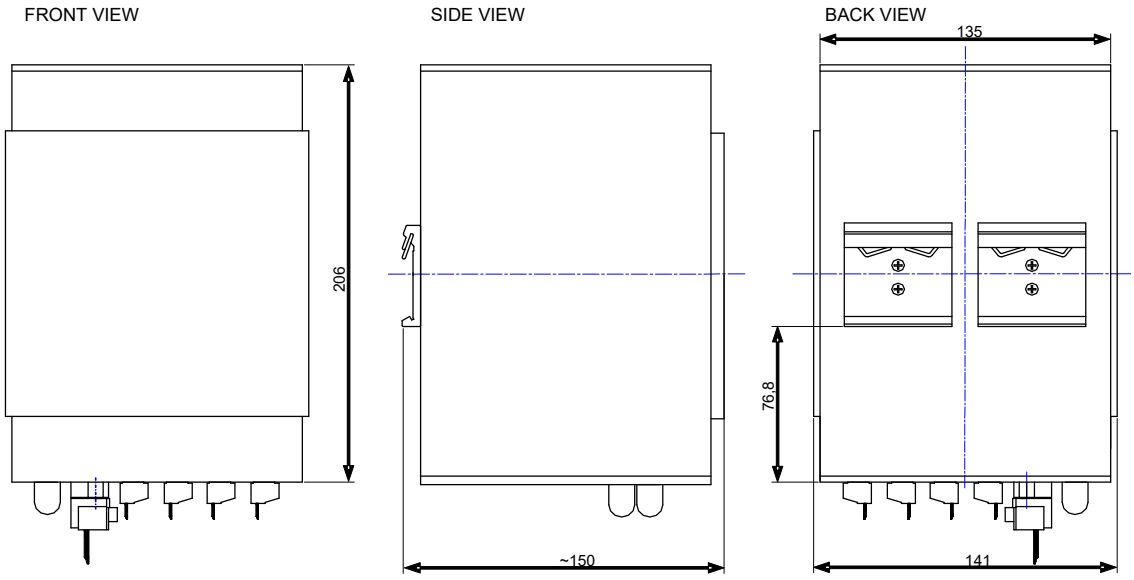



Figure 21-18 Dimensions for din rail mounting of 24 HP panel instrument case

21.6 IP54 rated mounting kit

The IP frame seen below provides IP54 protection from the front side for 84HP and 42HP devices.

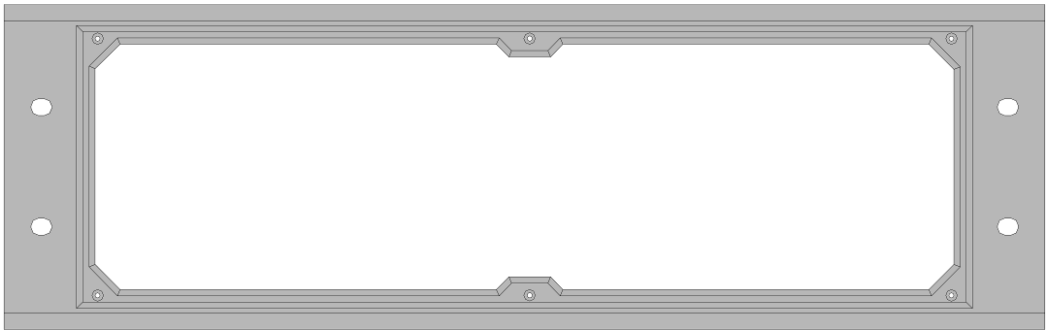

Figure 21-19 84 HP IP frame front view



Figure 21-20 42 HP IP frame front view

S24 devices

The S24 devices' front panel *does not differ from the normal front panel on the outside*, as there is IP54 gasket applied within the frame itself. Devices ordered with this option must be mounted by *flush mounting*; with other types of mountings (e.g. semi-flush), the IP54 protection is not guaranteed!

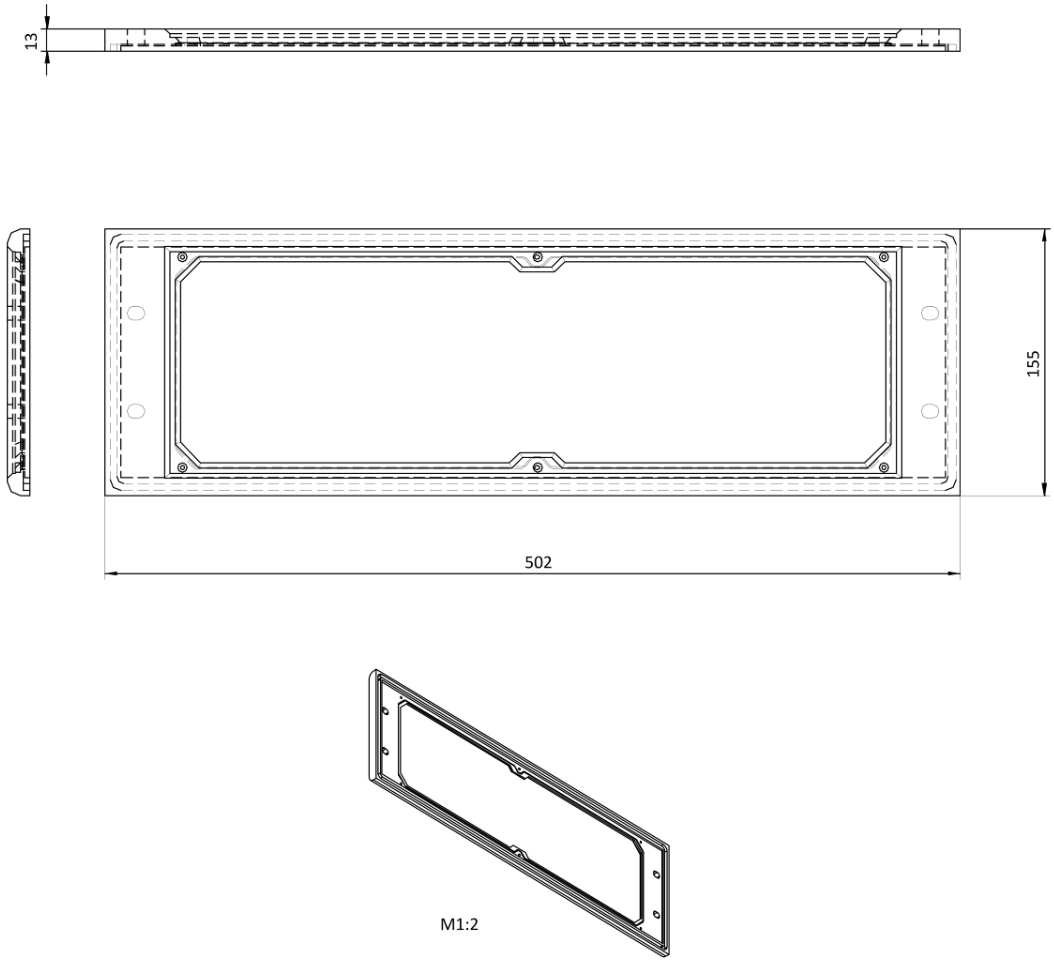

Figure 21-21: 84 HP IP frame dimensions

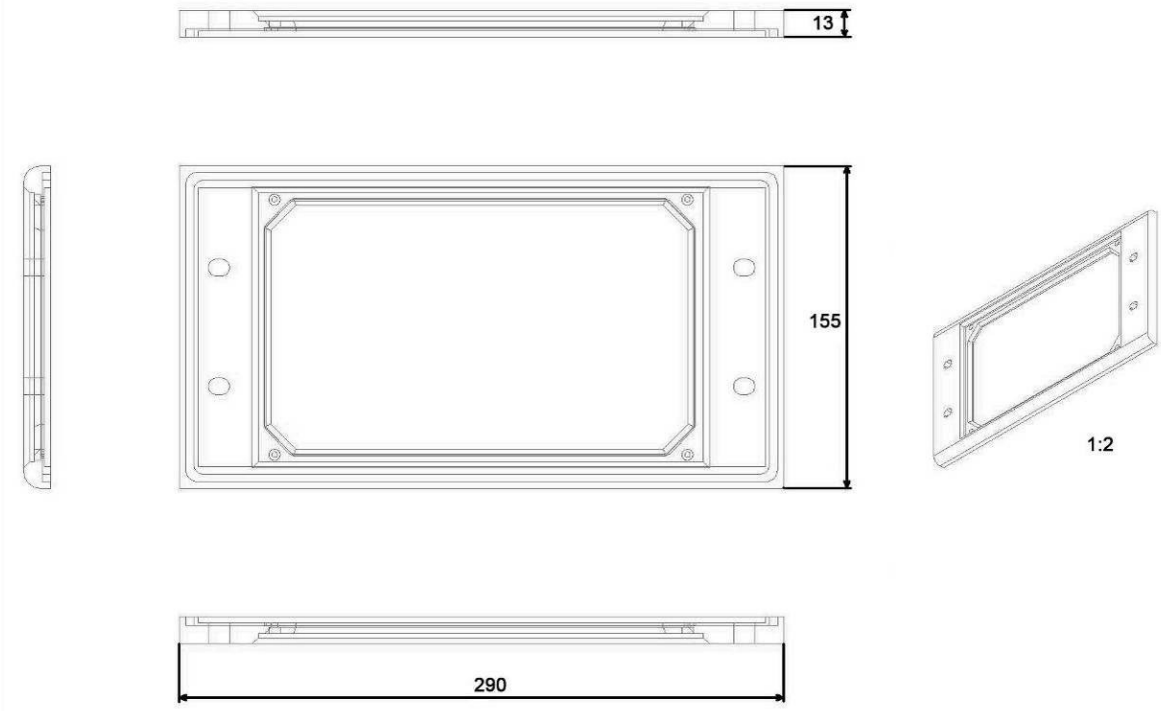

Figure 21-22 42 HP IP frame dimensions

21.7 Fold-down mounting

21.7.1 Fold-down mounting without terminals

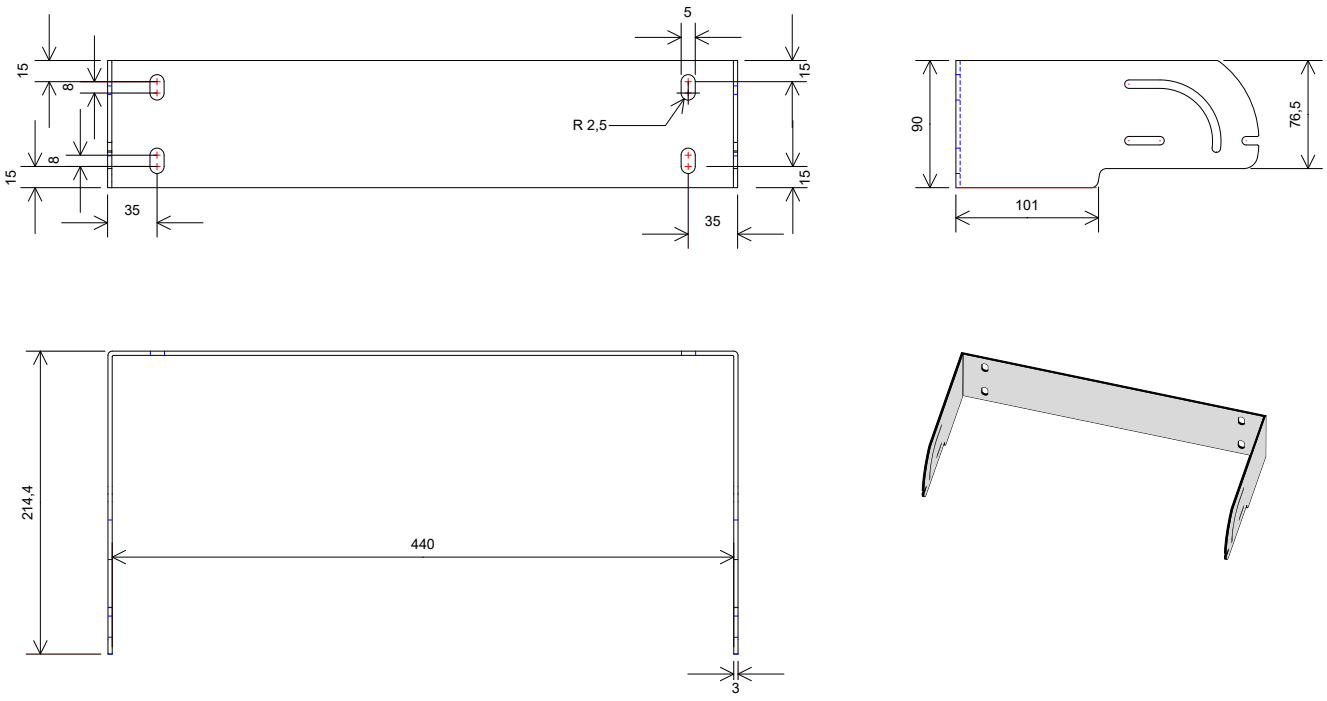

Figure 21-23 84 HP fold-down mounting

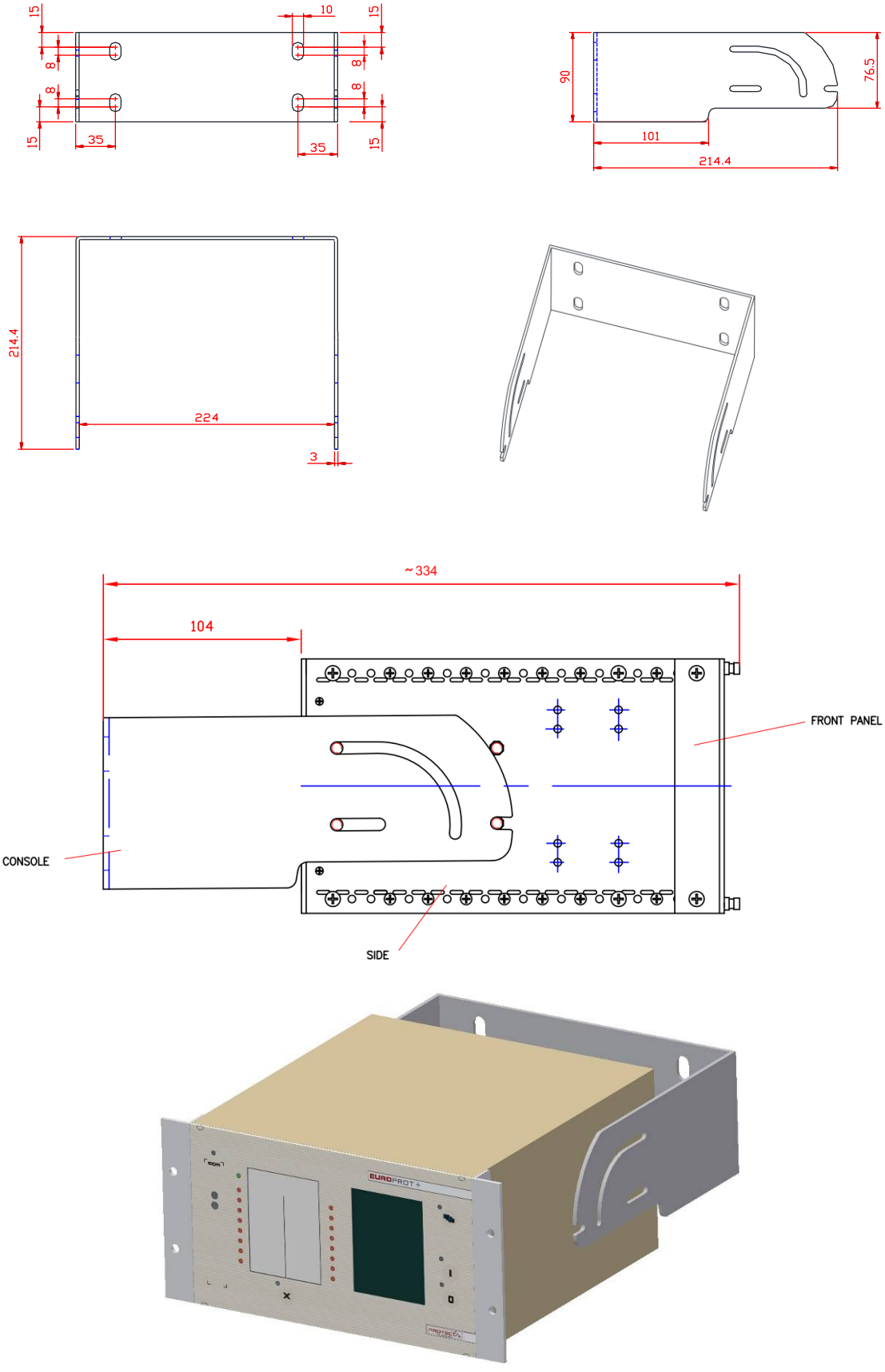

Figure 21-24 42 HP fold-down mounting

21.7.2 Fold-down mounting with terminals

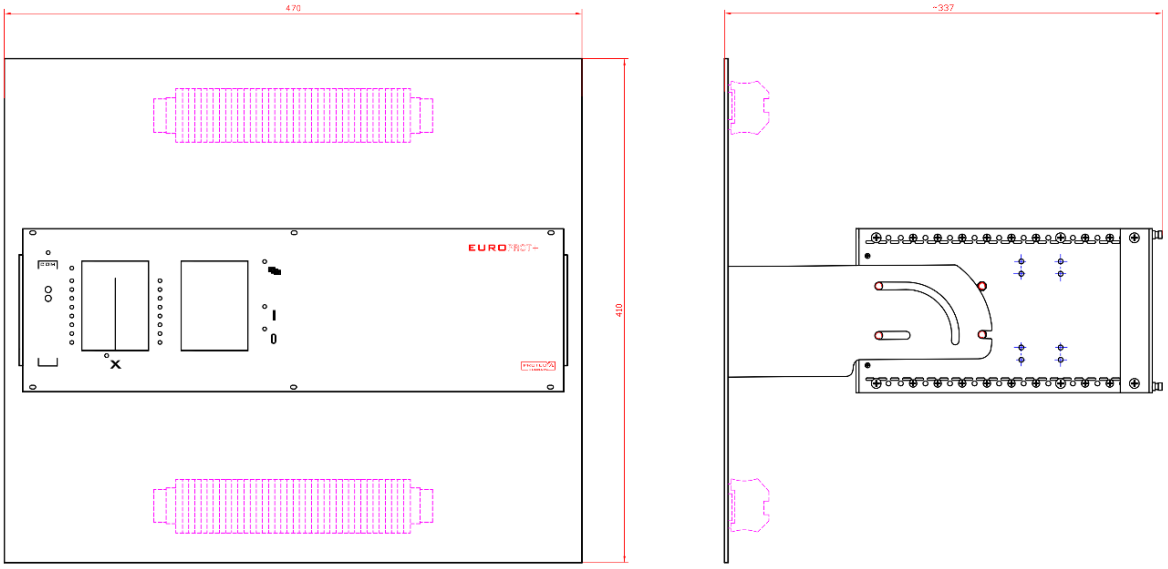

Figure 21-25 Fold-down mounting with terminals for 84HP devices

*Fastening points are customized.

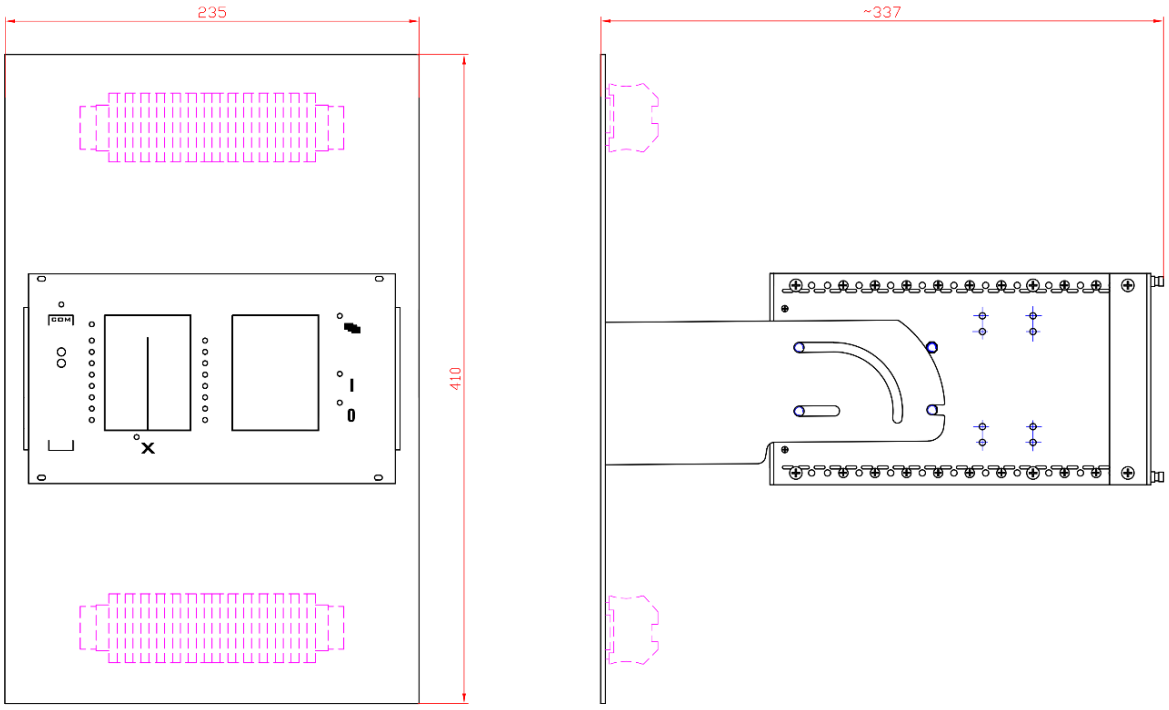

Figure 21-26 Fold-down mounting with terminals for 42HP devices

21.8 No mounting

“No mounting” means that the 84 HP and 42 HP devices do not have any mounting accessories on them.

This mounting method is only applicable if the device is for demonstration application.

For more information about this topic please contact our Application Team. (*application@protecta.hu*)

21.9 Remote HMI devices

IMPORTANT

The dimensions of the cut-outs applicable for the remote HMI depend on which previously mentioned mounting method is used (flush mounting, semi-flush mounting or rack mounting).

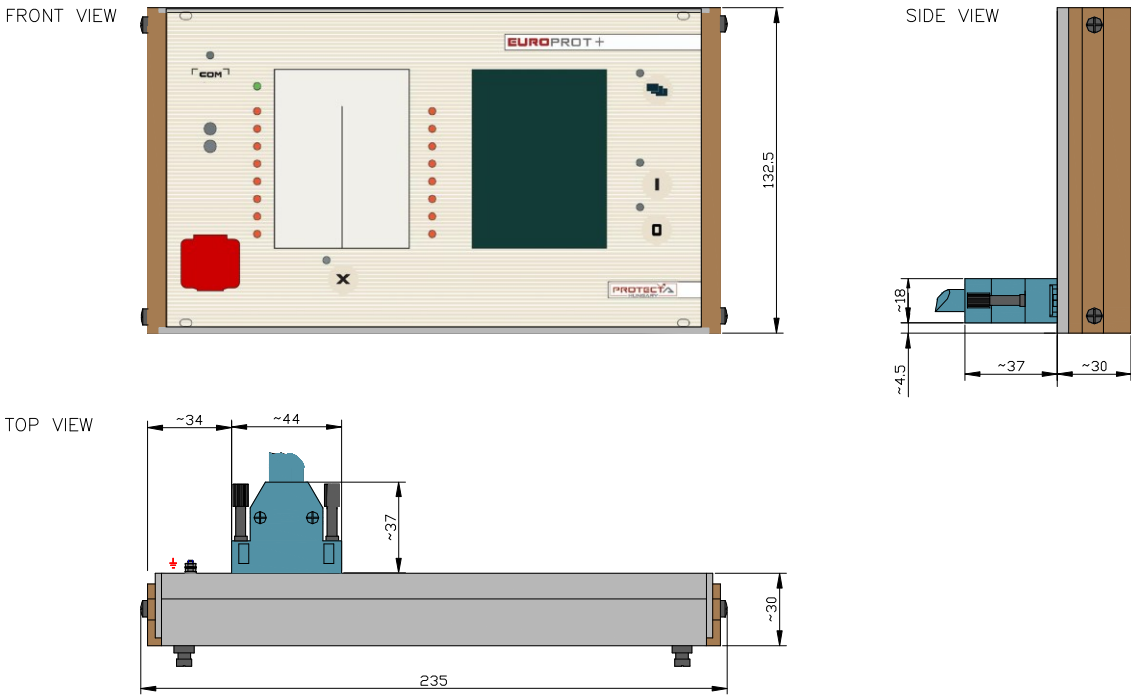

Figure 21-27 Dimensions for 42 HP wide remote HMI

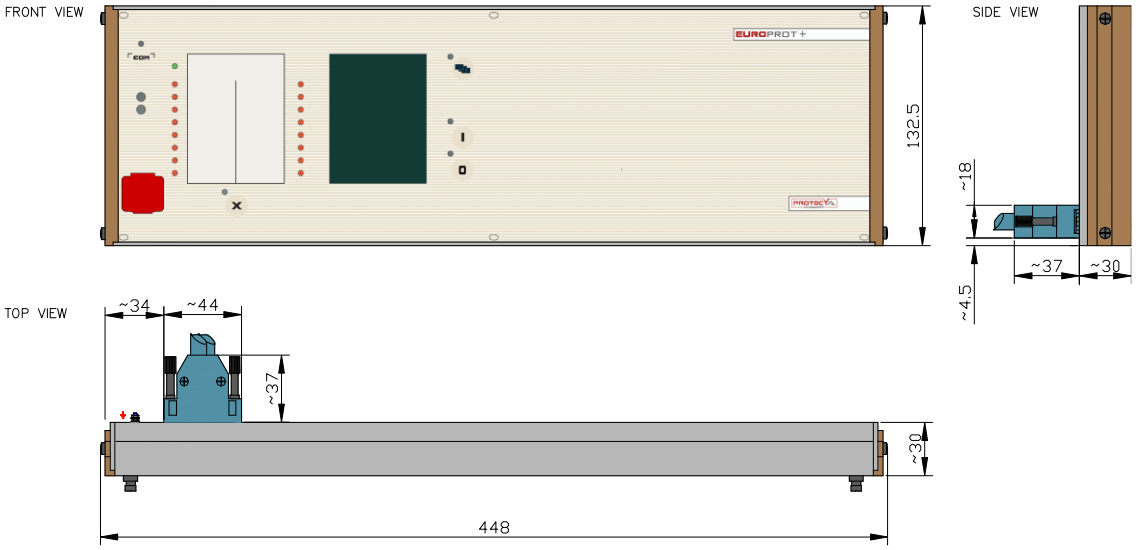

Figure 21-28 Dimensions for 84 HP wide remote HMI

22 Product availability (special and obsolete modules)

In this chapter you can read a list of the modules that have not regular availability for any reason (being obsolete or being used only in special configurations).

Special modules:

These modules can be ordered in case of special applications which are indicated for each module in its description in the previous chapters.

For more information about these devices please contact our Application Team. (application@protecta.hu)

Optional connectors:

The optional connectors are indicated at each module's description in the previous chapters. If a module is to be shipped with an optional connector, the issue must be discussed during ordering.

MODULE TYPE	COMMENT	DATE
CPU+/0001	Legacy CPU card, not recommended for new configurations. Replacement: CPU+1211	2013-06-12
CPU+/0002	Legacy CPU card, not recommended for new configurations. Replacement: CPU+1111	2013-06-12
CPU+/0003	Legacy CPU card, not recommended for new configurations. Replacement: CPU+1101	2013-06-12
CPU+/0004	Legacy CPU card, not recommended for new configurations. Replacement: CPU+1201	2013-06-12
CPU+/0005	Legacy CPU card, not recommended for new configurations. Replacement: CPU+1281	2013-06-12
CPU+/0006	Legacy CPU card, not recommended for new configurations. Replacement: CPU+1381	2013-06-12
CT+/1155	Available only for special configurations.	2013-06-12
CT+/5152	Available only for OGYD bay unit configurations.	2013-06-12
VT+/2215	Available only for special configurations.	2013-06-12
O12+/2101	Available only for demonstration applications.	2013-06-12
O12+/4201	Available only for demonstration applications.	2013-06-12
R4S+/01	Available only for special configurations.	2013-06-12
R4S+/16	Available only for special configurations.	2013-06-12
TRIP+/1101	Obsolete module. Not recommended for new designs.	2013-06-12
PS+/1602	Available only for special configurations.	2013-06-12
HMI+/2401	Obsolete module. Not recommended for new designs.	2014-10-06
HMI+/2404	Smart Line S24 special selection modules.	2014-10-06
HMI+/2504	Smart Line S24 special selection modules.	2014-10-06
COM+/8882	Available only for special configurations.	2014-10-06
CT+/1111	Available only for special configurations.	2014-10-06
CT+/2500	Available only for special configurations.	2014-10-06

CT+/5153	Available only for special configurations.	2014-10-06
VT+/2212	Available only for special configurations.	2014-10-06
R8+/01	Available only for special configurations.	2014-10-06
R8+/A1	Available only for special configurations.	2014-10-06
R8+/C0	Available only for special configurations.	2014-10-06
R8+/FF	Available only for special configurations.	2014-10-06
R12+/4400	Available only for special configurations.	2014-10-06
R16+/0101	Available only for special configurations.	2014-10-06
R16+/0001	Available only for special configurations.	2014-10-06
R16+/A001	Available only for special configurations.	2014-10-06
PS+/4401	Available only for special configurations.	2014-10-06
CT+/2500	Obsolete module. Not recommended for new designs. Replacement: CT+1500.	2015-02-13
PSTP+/2102	Available only for special configurations.	2015-06-23
PSTP+/4202	Available only for special configurations.	2015-06-23
CT+/5111	Available only for special configurations.	2015-12-08
CT+/0101	Available only for special configurations. DEFL earth fault protection only.	2018-03-19
INJ+/0015	Available only for special configurations.	2018-03-19
CT+/5155	Available only for special configurations.	2018-03-26
VT+/2246	Available only for special configurations.	2018-03-26
AIC+/0201	Obsolete module. Not recommended for new designs.	2018-03-26
CT+/5111	Obsolete module. Not recommended for new designs.	2018-03-27
VS+/0031	Obsolete module. Not recommended for new designs.	2018-05-25
R1T+/0001	Available only for special configurations. DMD.	2018-10-05
CT+/5253	Available only for special configurations.	2018-10-05
42 HP housing	The length of the 42 HP box has been reduced from 242 mm to 223 mm. For more information about the previous size of the 42 HP box please see the Figure 22-1.	2018-12-18
AIC+/0200	Obsolete module. Not recommended for new designs.	2019-04-08
PS+/1030	Available only for special configurations.	2020-05-07
PS+/1060	Available only for special configurations.	2020-05-07
HMI+/5001	Obsolete module. Not recommended for new designs.	2020-06-04
HMI+/5002	Obsolete module. Not recommended for new designs.	2020-06-04

HMI+/3502 (for 42HP)	Obsolete module. Not recommended for new designs.	2020-06-04
CT+/1515	Available only for special configurations.	2020-06-04
CT+/5115	Available only for special configurations.	2020-06-04
CT+/5116	Available only for special configurations.	2020-06-04
CT+/5154	Available only for special configurations.	2020-06-04
PS3F+/1001	Available only for special configurations.	2020-06-04
RTD+/0200	Available only for special configurations.	2020-06-04
RTD+/1200	Available only for special configurations.	2020-06-04
R4MC+/01	Available only for special configurations.	2020-06-04
PS+/4301	Obsolete module. Not recommended for new designs.	2020-06-04
84 HP housing	The depth of the 84 HP box has been reduced from 242 mm to 223 mm. For more information about the previous size of the 84 HP box, see the Figure 22-1.	2021-04-01
HMI+/3501	Obsolete module. Not recommended for new designs.	2021-04-20
HMI+/3502	Obsolete module. Not recommended for new designs.	2021-04-20
HMI+/5701	Obsolete module. Not recommended for new designs.	2021-04-20
HMI+/5702	Obsolete module. Not recommended for new designs.	2021-04-20
COM+/1202	Obsolete module. Not recommended for new designs.	2021-04-20
COM+/1324	Obsolete module. Not recommended for new designs.	2021-04-29
VT+/2212	Obsolete module. Not recommended for new designs.	2021-05-06
CT+/5154	Obsolete module. Not recommended for new designs.	2021-05-06
O16+/2401	Obsolete module. Not recommended for new designs.	2022-03-22
O16+/4801	Obsolete module. Not recommended for new designs.	2022-03-22
O16+/1101	Obsolete module. Not recommended for new designs.	2022-03-22
O16+/2201	Obsolete module. Not recommended for new designs.	2022-03-22
F terminal type	Obsolete terminal type. Not recommended for new designs.	2024-05-27
CT+/5101	Obsolete module. Not recommended for new designs.	2024-05-30
CT+/5152	Obsolete module. Not recommended for new designs.	2024-05-30
R8+/01	Obsolete module. Not recommended for new designs.	2024-05-30
R16+/0000	Obsolete module. Not recommended for new designs.	2024-05-30
R16+/8000	Obsolete module. Not recommended for new designs.	2024-05-30
R16+/8080	Obsolete module. Not recommended for new designs.	2024-05-30
CT+/5102	Obsolete module. Not recommended for new designs.	2024-06-03

HMI+/3505	Obsolete module. Not recommended for new designs.	2024-11-22
HMI+/3405	Obsolete module. Not recommended for new designs.	2024-11-22
HMI+/3506	Obsolete module. Not recommended for new designs.	2024-11-22
HMI+/3406	Obsolete module. Not recommended for new designs.	2024-11-22
HMI+/3404	Obsolete module. Not recommended for new designs.	2024-11-22
HMI+/5706	Obsolete module. Not recommended for new designs.	2024-11-22
HMI+/5704	Obsolete module. Not recommended for new designs.	2024-11-22
HMI+/2604	Obsolete module. Not recommended for new designs.	2024-11-22
HMI+/2404	Obsolete module. Not recommended for new designs.	2024-11-22
HMI+/2304	Obsolete module. Not recommended for new designs.	2024-11-22
HMI+/2606	Obsolete module. Not recommended for new designs.	2024-11-22
HMI+/2406	Obsolete module. Not recommended for new designs.	2024-11-22
HMI+/2306	Obsolete module. Not recommended for new designs.	2024-11-22
HMI+/2704	Obsolete module. Not recommended for new designs.	2024-11-22
HMI+/2504	Obsolete module. Not recommended for new designs.	2024-11-22
HMI+/2706	Obsolete module. Not recommended for new designs.	2024-11-22
HMI+/2506	Obsolete module. Not recommended for new designs.	2024-11-22
O16+/1101	Obsolete module. Not recommended for new designs.	2025-07-21
O16+/2201	Obsolete module. Not recommended for new designs.	2025-07-21
O16+/2401	Obsolete module. Not recommended for new designs.	2025-07-21
O16+/4801	Obsolete module. Not recommended for new designs.	2025-07-21
HMI+/5006	Obsolete module. Not recommended for new designs.	2025-07-21
HMI+/5004	Obsolete module. Not recommended for new designs.	2025-09-01

22.1 Previous 42HP and 84HP device housings

As of 2021. Q2, not only the 42HP, but the 84HP devices are shipped with shorter racks as well. Note that this is the only difference between the new and old housings. The new racks are shorter by 19 mm from the front, thus their depth is 223 mm instead of 242 mm.

The mounting methods described in Chapter 21 are valid for the previous racks as well, keeping in mind that the depth of the device is 19 mm bigger than that of the drawings. As an example, see the previous drawing of the flush mounting for 42HP and 84HP devices in Figure 22-1. As a comparison, the new, shorter rack is also drawn in **light blue**.

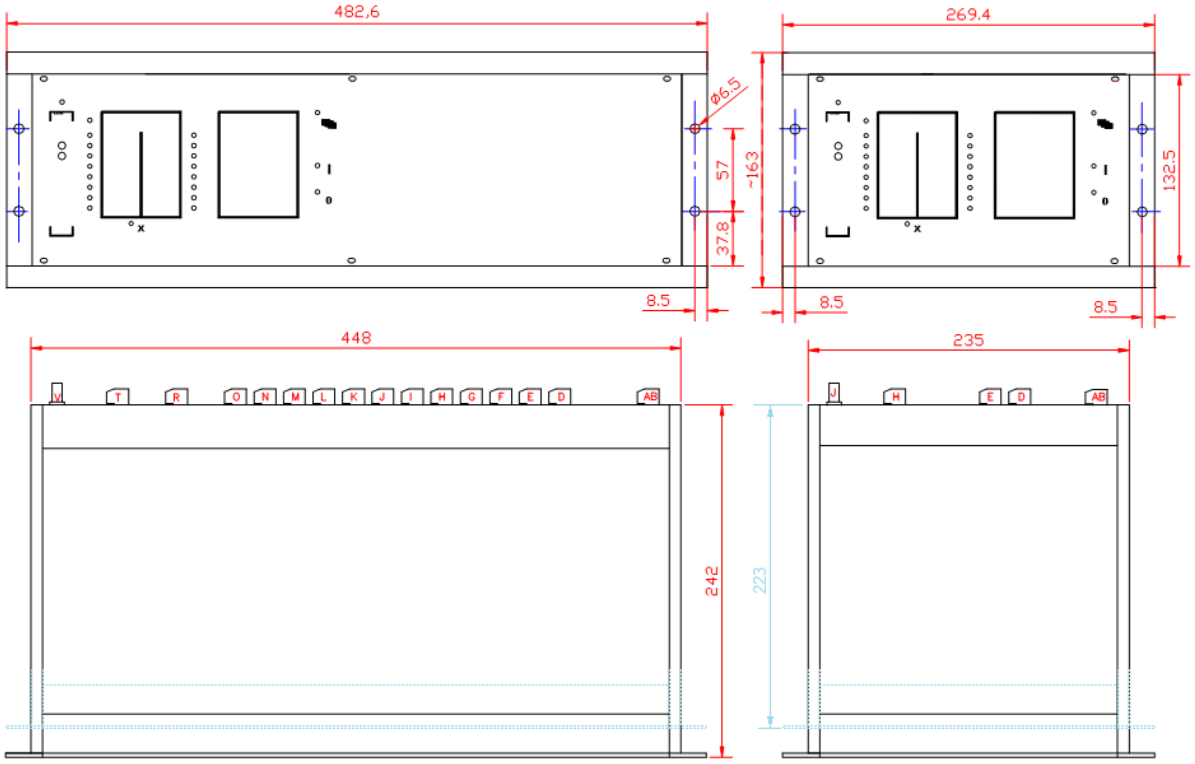

Figure 22-1 Dimensions for flush mounting of the previous 84HP and 42HP single rack, including the new (shorter) rack dimensions as well.